installation and servicing

Concord ES140-380/H

Your Ideal installation and servicing guide

spares & parts online
IBASIS.co.uk©

04/02 - 94858551 - 8358 - 4747

When replacing any part on this appliance, use only spare parts that you can be assured conform to the safety and performance specification that we require. Do not use reconditioned or copy parts that have not been clearly authorised by Ideal Boilers.

Ideal BOILERS
ENGINEERED FOR PEACE OF MIND

Table 1 - Performance Data

Boiler		ES 140/H	ES 160/H	ES 180/H	ES 200/H	ES 220/H	ES 260/H	ES 300/H	ES 340/H	ES 380/H
Number of Sections		8	9	10	11	12	14	16	18	20
Boiler Output	2nd stage kW	119-140	136-160	153-180	170-200	187-220	221-260	255-300	289-340	323-380
	1st stage kW	83-98	95-112	107-126	119-140	131-154	155-182	179-210	202-238	226-266
Boiler Input	2nd stage kW	131,1-153	149,7-174,7	168,2-196,3	186,7-217,9	205,2-239,4	242,2-282,6	278,8-325,4	315,7-368,4	352,4-411,3
(Nett CV)	1st stage kW	93,1-108,9	106,3-124,3	119,4-139,7	132,5-155	145,6-170,4	171,9-201,1	197,9-231,5	224-262,1	250,1-295,6
Gas	2nd stage m^3/h	13,88-16,19	15,84-18,48	17,80-20,77	19,76-23,05	21,71-25,33	25,63-29,91	29,51-34,43	33,40-38,98	37,29-43,52
flow rate	1st stage m^3/h	9,85-11,52	11,24-13,15	12,63-14,78	14,02-16,41	15,41-18,03	18,19-21,28	20,94-24,50	23,71-27,74	26,47-30,97
Burner pressure	2nd stage mbar	8.8 - 11.8								
	1st stage mbar	1st stage pressure = 0.5 x adjusted 2nd stage pressure								
Approx. flue gas volume	m^3/sec	0.115	0.123	0.148	0.163	0.171	0.209	0.228	0.247	0.304
Flue Gas Temperature	ºC	125	133	123	125	130	126	133	140	126
CO_2	%	6.4	7	6.3	6.4	6.8	6.5	7	7.5	6.5

Note: *The above tables show both 85% and 100% full output figures. The output is adjustable.*

Table 2 - General Data

Boiler		ES 140/H	ES 160/H	ES 180/H	ES 200/H	ES 220/H	ES 260/H	ES 300/H	ES 340/H	ES 380/H
Main burner injector	mm	3, 9								
Ignition burner injector	mm	0,8								
Maximum flow temperature	ºC	90								
Maximum operating pressure	bar	6								
Electrical connection	V / Hz	230 / 50								
Maximum electrical power	W	450								
Gas connection	(inch BSP)	1"	1"	1"	1"	1"	1" 1/4	1" 1/4	1" 1/4	1" 1/2
Flow & return connections	(inch BSP)	2"								
Flue outlet diameter	mm	250	250	300	300	300	350	350	350	400
Water content	litre	61	68	76	84	91	106	122	137	154
Water circuit	at ΔT = 11 K mbar	66	87	110	136	164	229	305	392	489
resistance	at ΔT = 20 K mbar	20	26	33	41	50	69	92	118	148
Dry weight	kg	575	635	690	750	805	920	1035	1150	1350

CONTENTS

Air Supply. 8

Boiler Clearances. 11

Boiler Dimensions. 5

Boiler Operation - Controls. 10

Casing Assembly. 22

Chimney System. 8

Commissioning & Testing. 31

Control Panel Description. 28

Data Tables. 2

Electrical Connections. 27

Electrical Supply. 8

Gas Safety Regulations 3

Gas Supply. 8

Hydraulic Resistance. 4

Initial Lighting. 31

Installation. 12

Mandatory Requirements. 7

Option Kits. 4

Pack Lists. 12

Pump. 4

Servicing. 33

Static Head Requirements. 6

Ventilation. 8

Water Circulation. 4

Water Connections. 4

Water Treatment. 6

Wiring Diagrams. 30

INTRODUCTION

CONSTRUCTION

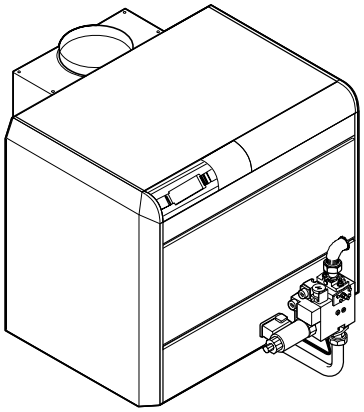

Concord ES boilers are sectional cast iron boilers, with an atmospheric two-stage gas burner and electronic ignition via an ignition burner. The heat output is adjustable to 85% of full output. The combustion chamber and draught diverter are sheet steel. They are designed for use with a hot water central heating system, and have a heat output range of: 119 - 380 kW

They must be connected to a chimney. The heat exchanger can be supplied, assembled, or unassembled for site assembly. They are suitable for natural gas only.

CERTIFICATION

EC:

The Concord ES boilers meet the requirements of the following European directives and are tested according to EN 656:

- 90.396 EEC Gas Appliances Directive
- 92.42 EEC Boiler Efficiency Directive
- 73.23 EEC Low Voltage Directive

  Relevant standard: EN 60.335.1
- 89.336 EC Electromagnetic Compatibility Directive Relevant standards: EN 50.081.1 / EN 50.082.1 / EN 55.014.

The boilers are of the B11 type

EC No: CE 0085 BL 0187 (Concord ES)

Gas Safety (Installation and Use) Regulations or rules in force.

It is the law that **all** gas appliances are installed and serviced by a CORGI registered installer in accordance with the above regulations. Failure to install appliances correctly could lead to prosecution. It is in your own interest, and that of safety, to ensure that the law is complied with.

Note. ***Concord ES*** *boilers are intended for use as COMMERCIAL BOILERS and are NOT certified for use in domestic applications. A domestic installation is defined as an installation where the boiler takes its combustion air from a living space or from a room directly or indirectly connected with the living space. It is important, therefore, that no external control devices - e.g. flue dampers, economisers etc., are directly connected to this appliance unless covered by these Installation and Servicing Instructions or otherwise recommended by* **Caradon Ideal Limited** *in writing. If in doubt, please enquire.*

Any direct connection of a control device not approved by **Caradon Ideal Limited** *could invalidate the Certification, the normal appliance warranty and could also infringe the Gas Safety Regulations. Table 1 and 2 and the descriptive notes which follow contain all the essential data likely to be required by the installer.*

CAUTION. To avoid the possibility of injury during the installation, servicing or cleaning of this appliance care should be taken when handling edges of sheet steel components.

GAS CONTROLS

Control is by automatic ignition of intermittent pilot; once the presence of a flame has been proved the main gas valve opens to give heat input according to thermostat settings. The mains voltage supply is via a terminal strip connection at the control box.

ELECTRICAL CONTROLS

The boiler is supplied with a control box providing full logic and sequence control. A separate ignition transformer is fitted. Details of the control panel are given in Frame 40.

FROST PROTECTION

If frost is likely, leave the boiler thermostat at a reduced temperature setting and do not turn off the gas cock. Ensure external controls allow the boiler to operate if necessary. Note that this may not protect remote parts of the system, in which case a separate frost thermostat should be fitted or the system drained and the boiler shut down, as for Long Periods.

OPTION KITS

Hours run meter kit (IC8)
One or two hours run meters to measure 1st and 2nd stage operation.

Flue gas thermometer kit (ID28)
Provides measurement of flue gas temperature.

DUTY

The range of boilers is suitable for: Combined indirect pumped domestic hot water ***and*** central heating systems; Independent indirect pumped domestic hot water ***or*** central heating systems.

Fully pumped systems may be open vented or sealed.

The range of boilers is NOT suitable for:

1. Gravity DHW systems.
2. Gravity heating systems.
3. Direct domestic hot water supply.

WATER CIRCULATION SYSTEM

Due to the compact nature of the boiler the heat stored within the castings at the point of shutdown of the burner must be dissipated into the water circuit in order to avoid the overheat thermostat tripping. The system controls must allow a pump overrun period, after burner shutdown, of 3 minutes.

1. The minimum flow rate given by:

   $$\text{min flow rate} = \frac{0.86.P}{45}\ m^3/\text{hour}$$

   where P = max. heat output of boiler (kW)

   must be maintained whenever the boiler is firing and during the pump overrun period.

2. During the period of pump overrun there must be an open circuit of adequate water volume and/or load.
3. Pump selection should take account of the hydraulic resistance given in the Data Tables on page 2.

PUMP POSITIONS

Whenever practically possible the circulating pump(s) should be positioned so that it pressurises the system being served. The vertical distance between the pump(s) and any cold feed and expansion cistern MUST comply with the pump manufacturers requirements in order to avoid cavitation. These requirements override the information given in Frame 3 if the static head required for the pump(s) exceeds that required for the boiler.

1 WATER CONNECTIONS

Safety Valve

A safety valve must be sized and fitted in accordance with BS. 6644 for every type of system. The valve should be set at 0.7 bar (10 lb/in.^{2}) above the operating pressure in the boiler. The maximum safety valve setting is 0.7 bar (10 lb/in.^{2}) above the maximum design operating pressure of 6 bar (87 lb/in.^{2}).

Cold Feed/Open Vent

The independent cold feed and the open vent must comply with BS. 6644 and be of the following minimum size.

Boiler Size	Cold Feed	Open Vent
61 - 150	1"	1 1/4"
151 - 300	1 1/4"	1 1/2"
301 - 600	1 1/2"	2"

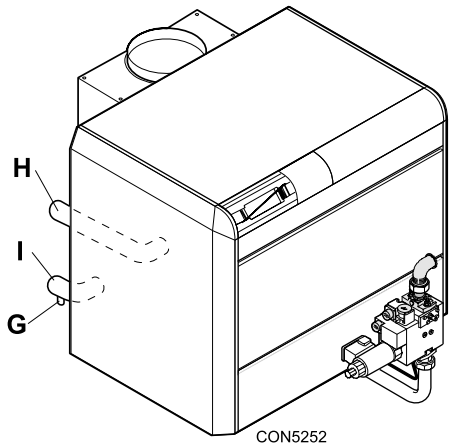

G Drain (tapped 3/4")

H 2" threaded flow connection

I 2" threaded return connection

System connections H and I must be on the same side (either on the right or on the left but never to opposite sides).

Note

The connections may be welded.

LOW TEMPERATURE OPERATION

The flow temperature from the Concord ES boiler can be reduced to a minimum of 40ºC dependent on the heat load requirement of the system. This is permissible in those situations where low modulated temperature operation is achieved using weather compensation. It is NOT permissible to design the system to run the boiler constantly at 40ºC flow. The return temperature must not be less than 35ºC.

2 DIMENSIONS

Table 3

Boiler Size	**ES 140/H**	**ES 160/H**	**ES 180/H**	**ES 200/H**	**ES 220/H**	**ES 260/H**	**ES 300/H**	**ES 340/H**	**ES 380/H**
No. of sections	8	9	10	11	12	14	16	18	20
Dimension **A**	1362	1362	1362	1362	1362	1412	1412	1412	1462
Dimension **B**	970	1058	1146	1234	1322	1498	1674	1850	2026
Dimension **øC**	250	250	300	300	300	350	350	350	400
Dimension **D**	632	720	808	896	984	1160	1336	1512	1688
Dimension **E**	165	165	165	165	165	190	190	190	220
Dimension **øF**	Rp 1	Rp 1	Rp 1	Rp 1	Rp 1	Rp 1 1/4	Rp 1 1/4	Rp 1 1/4	Rp 1 1/2
Dimension **G**	447	491	535	579	623	704	792	880	963
Dimension **H**	445	445	445	445	445	454	454	454	507
Dimension **J**	1094	1094	1094	1094	1094	1194	1194	1194	1194
Dimension **K**	1406	1406	1406	1406	1406	1406	1406	1406	1406

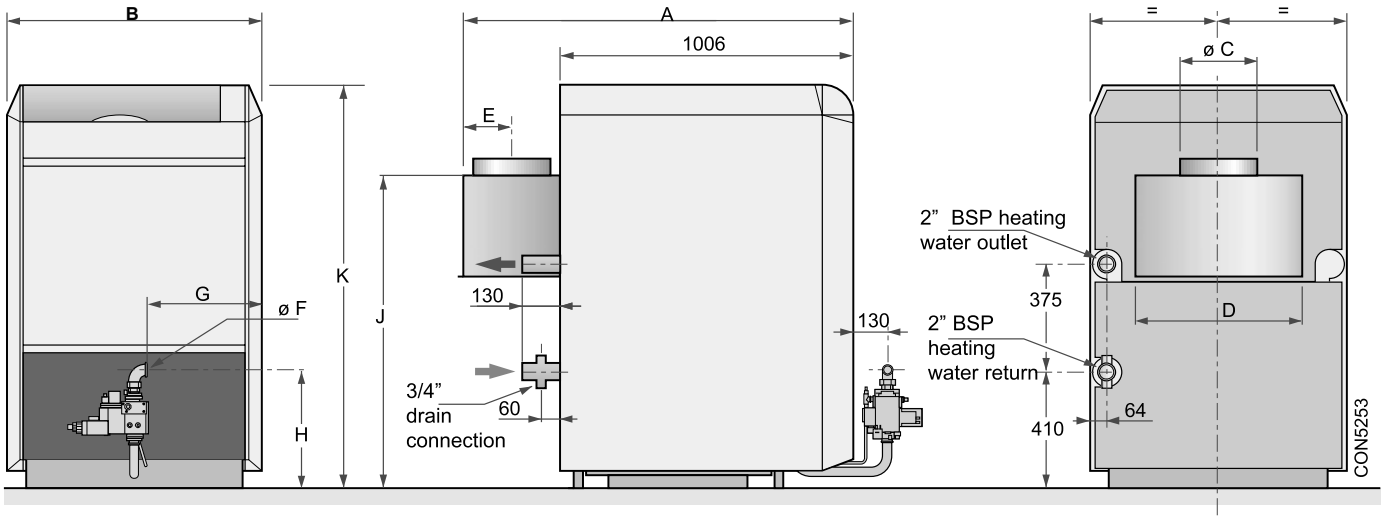

Hydraulic connections must be made on one side only (either on the right or on the left side), but never on opposite sides. The connections may be welded.

Gas inlet connection F may be made either from the right or the left side of the boiler.

3 OPEN VENTED SYSTEMS - Minimum static head requirements

Particular reference should be made to BS. 6644: Section 2; Subsection 10 and Guidance note PM5 "Automatically controlled steam and hot water boilers" published by the Health and Safety Executive.

The information and guidance given below is not intended to override any requirements of either of the above publications or the requirements of the local authority, gas or water undertakings.

Other British Standards applicable are BS.5422 and BS.6700.

The information provided is based on the following assumptions:

1. An independent open vent/safety pipe connection is made to the redundant boiler flow tapping or is positioned immediately after the system flow pipe connection to the header, as shown.
2. An independent cold feed/expansion pipe connection is made to the redundant boiler return tapping. Cold feed/ expansion pipe connections made to the pumped system return will result in an increase in the static head requirement, caused by the additional resistance of the distributor tube. Surging may also increase.
3. The normal design flow rate through the boiler is based on a temperature difference of 11 °C at full boiler output and the circulating pump is positioned in the flow to the system.
4. The boiler is at the highest point of circulation in the system. Systems designed to rise above the boiler flow tappings will automatically require a minimum static head higher than that shown.
5. The position of the open vent/safety pipe above the expansion cistern water level is given as a guide only. The final position will depend upon the particular characteristics of the system. Pumping over of water into the expansion cistern must be avoided.

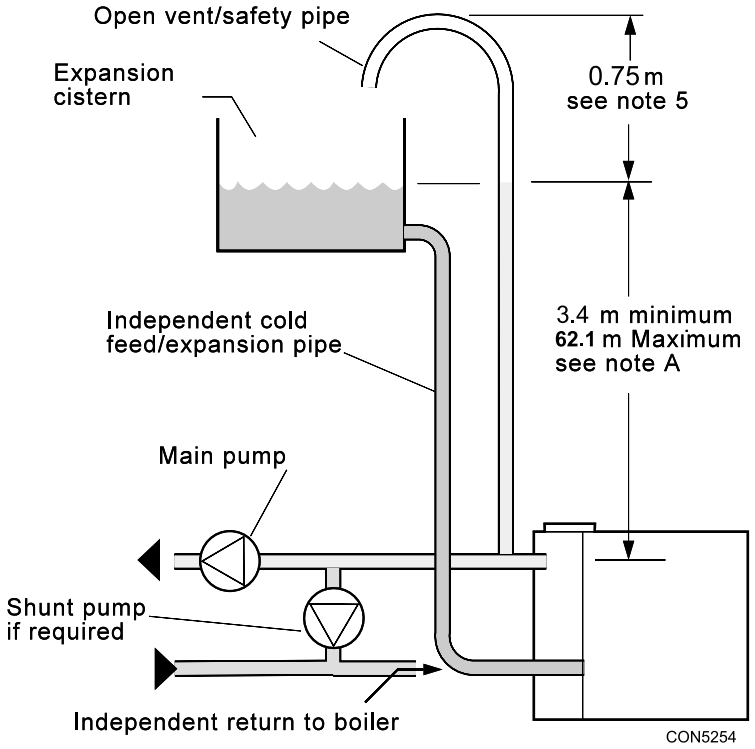

Note A. *This minimum height must be increased, if necessary, to comply with the minimum head required by the pump manufacturer in order to avoid cavitation.*

Note B. *This diagram does not show safety valves, water flow switches, etc., necessary for the safe operation of the system.*

WATER TREATMENT FOR HOT WATER AND HEATING BOILERS

There is a basic need to treat the water contained in all heating and indirect water systems, particularly open vented systems. It is assumed, incorrectly, that because boilers are operating in conjunction with what is apparently a closed circuit an open vented system will not, under normal circumstances, allow damage or loss of efficiency due to hardness salts and corrosion once the initial charge of water has been heated up a few times.

1mm of lime reduces the heat transfer from metal to water by 10%.

In practice the deposition of these salts is liable to cause noises from the boiler body or even premature boiler failure. Corrosion and the formation of black iron oxide sludge will ultimately result in premature radiator failure.

Open vented systems are not completely sealed from the atmosphere if proper venting and expansion of system water is to be achieved. The same tank is used to fill the system with water and it is through the cold feed pipe that system water expands into the tank when the boiler passes heat into the system. Conversely, when the system cools, water previously expelled is drawn back from the tank into the system together with a quantity of dissolved oxygen.

Even if leakage from the heating and hot water system is eliminated there will be evaporation losses from the surface of the tank which, depending upon ambient temperature, may be high enough to evaporate a large portion of the system water capacity over a full heating season.

There will always be corrosion within a heating or hot water system to a greater or lesser degree, irrespective of water characteristics, unless the initial fill water from the mains is treated. Even the water in closed systems will promote corrosion unless treated. For the reason stated, **Caradon Ideal Limited** strongly recommend that, when necessary, the system is thoroughly cleaned, prior to the use of stable inhibitor, which does not require continual topping up to combat the effects of hardness salts and corrosion on the heat exchangers of the boiler and associated systems.

Caradon Ideal Limited advise contact directly with specialists on water treatment such as:

Fernox Manufacturing Co. Ltd.,
Tandem House,
Marlowe Way,
Croydon.
Surrey CRO 4XS

Tel 0870 601 5000

or

Sentinel Division
Betz Dearborn Ltd.,
Widnes,
Cheshire, WA8 8UD
Tel. 0151 424 5351.

INSTALLATION REQUIREMENTS

The appliance must be installed by a CORGI registered installer.

The installation of the boiler must be in accordance with the relevant requirements of the Gas Safety Regulations, current I.E.E. (BS.7671) Regulations, Model Water Bye-laws, local water authority bye-laws and it should also comply with any relevant requirements of the local gas region, local authority and the relevant British Standard Codes of practice and building regulations.

FOR SMALL PIPE INSTALLATIONS

BS. 6891; Installation of low pressure pipework

FOR LARGE PIPE INSTALLATIONS

British Gas Publications

IM11: Flues for Commercial and Industrial Gas Fired Boilers and Air Heaters.

Gas Installations

IGE-UP-1: Purging Procedures of Non-domestic Gas Installations. Soundness Testing Procedures for Industrial and Commercial.

IGE-UP-2: Guidance notes on the Installation of Gas Pipework, Boosters and Compressors in Customer's Premises Equal to or Greater than 25mm (Non-domestic).

BS.6644: Installation of Gas Fired Hot Water Boilers 60kW to 2MW.

BS 6880 Pt 1-3: Water Supply.

CP342:2: Centralised Hot Water Supply.

Model Water Bye-laws

Manufacturers notes must not be taken, in any way, as overriding statutory obligations.

FOUNDATION

The boiler must stand on a non-combustible floor (i.e. concrete or brick) which must be flat, level and of a suitable load bearing capacity to support the weight of the boiler (when filled with water) and any ancillary equipment.

If the boiler is mounted on a plinth then the dimensions must exceed the plan area of the boiler by at least 75mm on each side.

4 SEALED (PRESSURISED) SYSTEMS

Working pressure 6 bar maximum.

Particular reference should be made to BS. 6644: Section 2; Subsection 11 and Guidance note PM5 "Automatically controlled steam and hot water boilers" published by the Health and Safety Executive.

The information and guidance given below is not intended to override any requirements of either of the above publications or the requirements of the local authority, gas or water undertakings.

In general commercial closed pressurised systems are provided with either manual or automatic water make up.

On both instances it will be necessary to fit automatic controls intended to protect the boiler, circulating system and ancillary equipment by shutting down the boiler plant if a potentially hazardous situation should arise.

Examples of such situations are low water level and operating pressure or excessive pressure within the system. Depending on circumstances, controls will need to be either manual or automatic reset. In the event of shutdown both visual and audible alarms may be necessary.

Pressure vessels used must comply with BS. 4814 and must be sized on the basis of the total system volume and initial charge pressure.

Initial minimum charge pressure should not be less than 0.3 bar (7.2 psi) and must take account of static head and specification of the pressurising equipment. The maximum water temperatures permissible at the point of minimum pressure in the system are specified in Guidance Note PM5.

When make-up water is not provided automatically it will be necessary to fit controls which shut down the plant in the event of the maximum system pressure approaching to within 0.35 bar (5 psi) of safety valve setting.

Other British Standards applicable to commercial sealed systems are:-

BS. 6880: Part 2.
BS. 1212
BS. 6281: Part 1
BS. 6282: Part 1
BS. 6283: Part 4

VENTILATION

Safe, efficient and trouble-free operation of open flued gas boilers is vitally dependent on the provision of an adequate supply of fresh air to the room in which the appliance is installed. Ventilation by grilles communicating to the outside air is required. The minimum free area and required positioning of these grilles must be in accordance with Table 6.

Table 4

Total input rating of boilers	Position of air vents	Air vent areas (air direct from outside)
Up to 2 MW	HIGH LEVEL	270 cm^2 plus 2.25 cm^2 per kW input in excess of 60 kW total rated input
Up to 2 MW	LOW LEVEL	540 cm^2 plus 4.5 cm^2 per kW input in excess of 60 kW total rated input

Position ventilation grilles to avoid the risk of accidental obstruction by blockage or flooding. If further guidance on ventilation is required then consult BS.6644 and BS.5440:2.: 2000.

AIR SUPPLY BY MECHANICAL VENTILATION

The supply of air by mechanical means to a space housing the boiler should be by mechanical inlet with natural or mechanical extraction. Mechanical extract ventilation with natural inlet must NOT be used.

Where a mechanical inlet and a mechanical extract system is applied, the design ventilation flow rates should be as in Table 4 of BS.6644.

The requirements for air supply by mechanical ventilation are given in BS.6644.

Note. *For mechanical ventilation systems an automatic control should be provided to cause safety shutdown or lockout of the boiler(s) in the event of failure of air flow in either inlet or extract fans.*

IMPORTANT. The use of an extractor fan in the same room as the boiler (or in an adjacent, communicating room) can, in certain conditions, adversely affect the safe operation of the boiler. Where such a fan is already fitted (or if it is intended to fit an extractor fan after installation of the appliance) the advice of the Gas Region should be obtained.

Tests for spillage of products from the draught diverter when the extractor fan is running and all doors and windows are shut should be carried out after installation. If spillage is detected, the area of permanent ventilation must be increased.

CHIMNEY SYSTEM

To ensure the safe and satisfactory operation of the boiler the chimney system (which may be common or individual, in the case of twin or multiple boiler installations) must be capable of the complete evacuation of combustion products at all times. The effective height of the chimney terminal(s) above the boiler outlet(s) must ensure sufficient buoyancy to overcome the resistance of the bends, tees and runs of the flue pipe involved and shall terminate in a down draught free zone. The number of bends and lengths of horizontal flue pipe used should be kept to a minimum in order to reduce gas flow resistance.

Compliance with the recommendations made in BS.6644, British Gas publication IM 11 'Flues for Commercial and Industrial Gas Fired Boilers and Air Heaters' and the' Third Edition of the 1956 Clean Air Act Memorandum' should be strictly observed where applicable.

The chimney design should avoid the formation of excessive quantities of condensate. For this reason it is recommended that all chimneys are insulated and lined. In the case of brick or similar structures a stainless steel rigid or flexible flue liner (grade 304/316) may be used in conjunction with a 50 mm (minimum) thick layer of vemiculite or perlite granules between the liner and the inner skin of the chimney body. Liners should be sealed at both top and bottom.

As the **Concord ES range** of boilers is supplied complete with an integral draught diverter, a diverter MUST *NOT* be fitted within the chimney system.

Drainage points positioned at the bottom of all vertical chimney sections should be provided. Drain pipes should be no less than 25 mm I.D., manufactured from acid condensate resistant material such as stainless steel and be positioned so that pipe runs and discharge points are not subject to the effects of frost and that flue gases cannot leak into the boiler room.

Care should be taken to ensure the specification of the chimney is suitable for the application by reference to the manufacturers literature. **Caradon Ideal Limited** can offer advice on the design of suitable chimney systems.

GAS SUPPLY

A minimum of 17.5 mbar (7 in w.g.) dynamic gas pressure must be available for boiler operation.

If there is any doubt regarding the capacity of the gas meter, the available gas pressure, the adequacy of existing service pipes or the size required for new service pipes then the advice of the gas region should be requested.

Installation pipework should be fitted and tested for gas soundness in accordance with BS. 6891;

IGE-UP-1 for small installations.

IGE-UP-2 for large installations.

The local gas region must be consulted if it is necessary to employ a gas pressure booster.

ELECTRICAL SUPPLY

WARNING. This appliance must be efficiently earthed.

A 230 V - 50 Hz mains supply is required, fused at 5 amps.

Wiring external to the appliance MUST be in accordance with the I.E.E. (BS. 7671) Wiring Regulations and any local regulations which apply.

For details of connections refer to Frame 39.

5 CONCORD ES

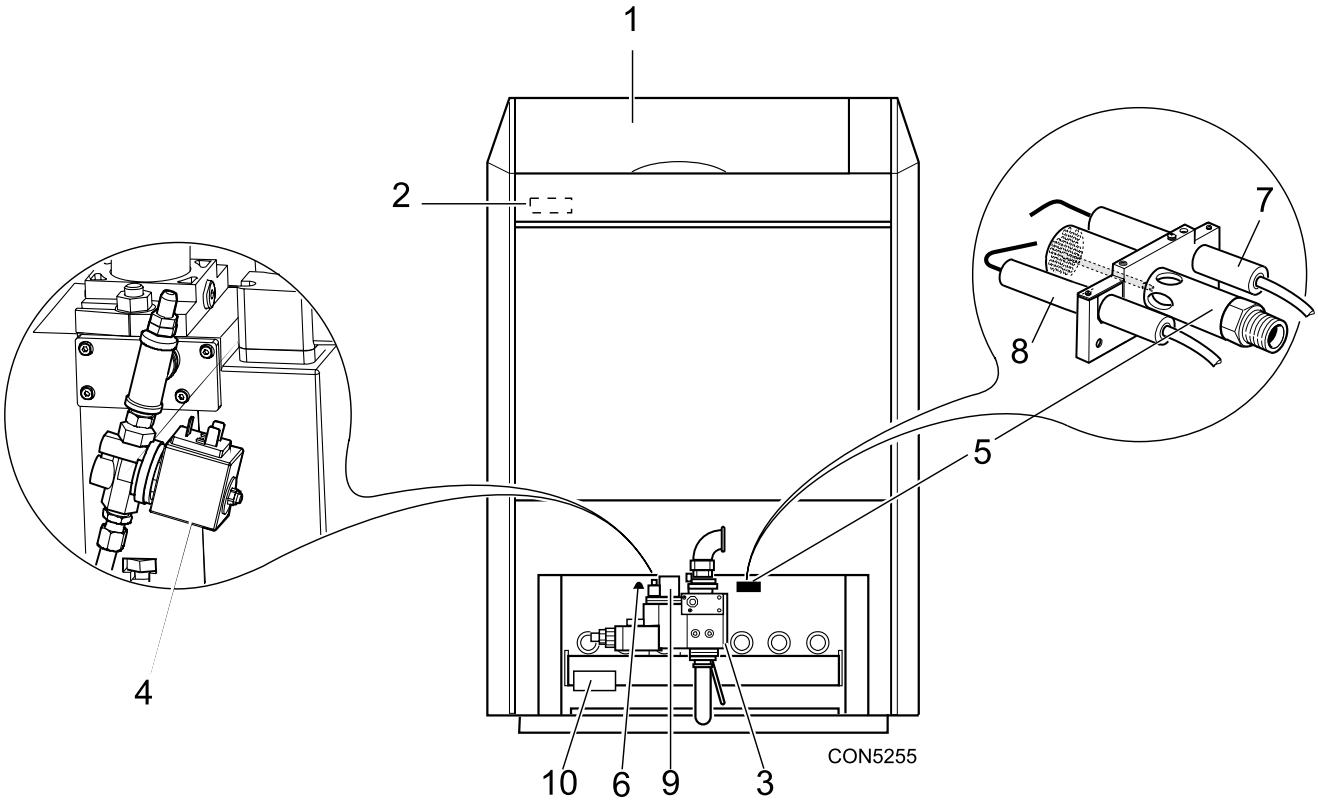

1. **Control panel**: refer to Frames 39 and 40 for description, operation and electrical connections.
2. **Safety control box**: this box performs and monitors the burner ignition, operation and switch-off sequences.
   - Type DUNGS DGAI 73 Mod. 10.1.0 TCL-G (see the operating cycle in Frame 6).
3. **Multiblock gas valve** comprising a safety valve and a main 2-stage valve with a filter and a minimum pressure sensitive switch.
4. **Ignition valve**
5. **Ignition burner**: it is used to ignite the main burner. An ignition electrode and an ionisation probe are fitted to the ignition burner.
6. **Ignition burner sighthole.**
7. **Ignition burner ionisation probe**: checks whether the flame of the ignition burner is on.
8. **Ignition electrode**
9. **Minimum gas pressure switch** (min. pressure 12,5 mbar)
10. **Ignition transformer**

6 OPERATION OF THE BOILER FITTED WITH THE DGAI 73 MOD. 10.1.0 TCL-G SAFETY CONTROL BOX

OPERATING PRINCIPLE

The boiler can operate either in the 2nd or in the 1st stage, depending upon the heat requirements of the installation.

The burner ignition and monitoring cycle is performed by the safety control box.

When heating is required, the boiler thermostat **TCH1** closes the contact. After a time delay **tw**, the ignition transformer **TA** produces a number of sparks at the ignition electrode and, after a pre-ignition delay **tvz**, the ignition burner valve **VG** and the safety valve **VS** open.

A flame appears at the ignition burner and the ionisation probe **SF** detects a flame signal with a minimum ionisation current of 1 μA. After the ionisation current has stabilised, the main burner 1st stage **BR1** (or 2nd stage **BR1 + BR2** if the 2nd stage thermostat **TCH2** requires heating) starts.

BEHAVIOUR IN ABNORMAL CONDITIONS

- If the flame is not detected before the end of safety time **ts**, the safety control box goes to lockout and the red indicator on the control panel lights up and remains on until it is reset manually.
- If the flame is lost during normal operation, the safety control box automatically repeats the start-up sequence. If the flame is not re-established then, the control box will lockout.

RESETTING

If at lockout, the safety control box is reset by pressing the reset button. If the first resetting does not give the expected result, **wait for at least 15 seconds** before resetting once again.

Note 1
When it is started up for the first time, the safety control box may be in safety position: press the reset button to release it.

Note 2
If the resetting button is pressed during normal operation, the gas valves close and the safety control box starts up a new sequence.

- Normal operating cycle

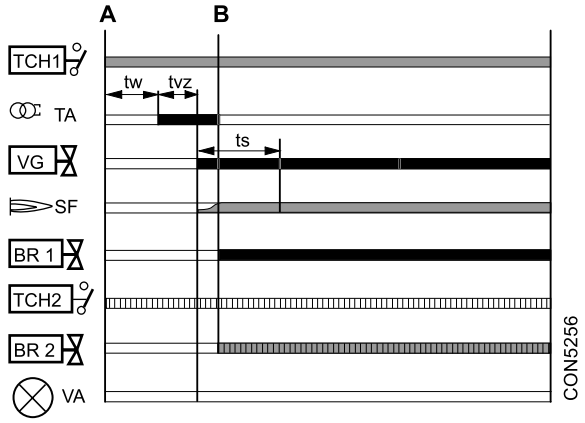

Operating cycle (switching the safety control box off while starting to check absence of flame signal)

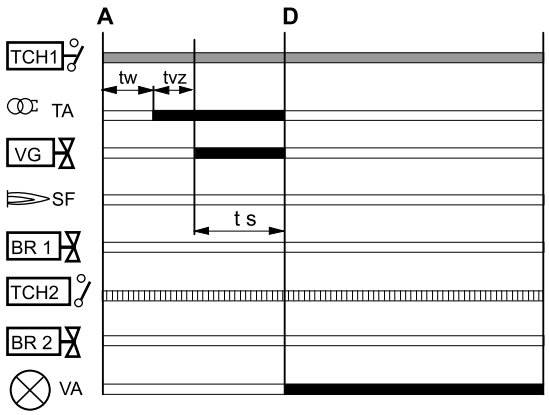

Required control signal

Safety box output signals

Call for 2nd stage heating

2nd stage operation

A : Beginning of start-up operation
B : Flame established at the ignition burner and start-up of the main burner
BR1 : 1st stage
BR2 : 2nd stage
D : Safety device goes to lockout because there is no flame signal
SF : Ignition burner flame signal
TA : Ignition transformer
TCH1 : 1st stage boiler thermostat
TCH2 : 2nd stage boiler thermostat
ts : Safety time, max. 10 seconds
tvz : Pre-ignition time (10 s.)
tw : Waiting time (5 s.)
VA : Alarm and safety control box lockout indicator
VG : Ignition valve + safety valve **VS**

7 BOILER CLEARANCES AND INSTALLATION

The figures indicate the minimum recommended dimensions for providing easy access around the boiler.

Boiler dimensions are given in mm.

No. of boiler sections	8	9	10	11
A mm	970	1058	1146	1234

No. of boiler sections	12	14	16	18
A mm	1322	1498	1674	1850

No. of boiler sections	20
A mm	2026

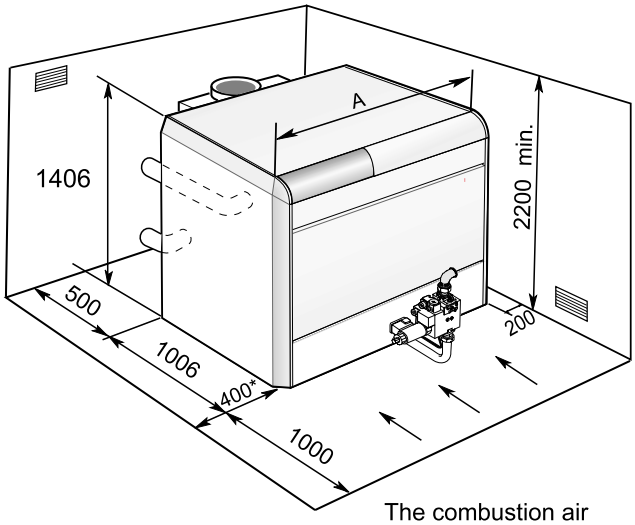

The combustion air must reach the burner from the front

* Clearance for water connections side is 400mm. This may be either right or left hand side.

For unassembled boiler bodies leave clearance equal to dimensions **a** and **b** for assembly tools (simplified JD tools for boilers with 8 to 14 sections or JD-TE tools for boilers with 8 to 20 sections or JD-TE Plus tools for any other model). Note: not supplied with the boiler, contact supplier of boiler for the hire of the same if required.

if a = 500mm ; b = 1600mm
if a = 1600mm ; b = 500mm

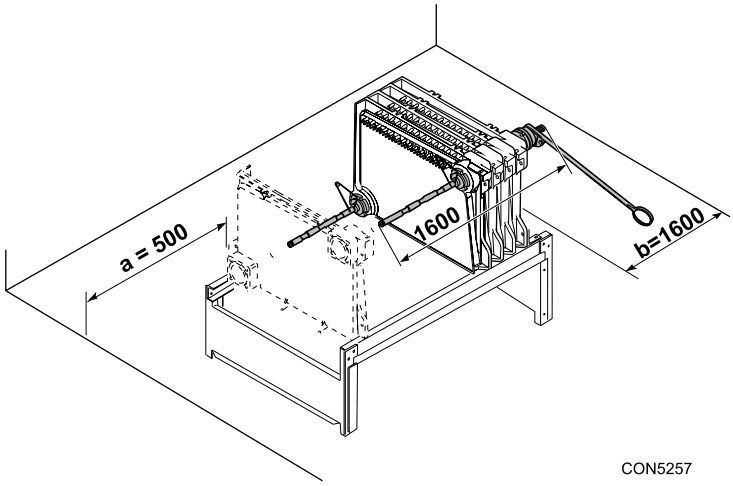

Multiple Boiler Installations

A clearance of 200mm must be allowed between boilers when installed in multiple.

Note

Please note that boilers installed in or close to rooms in which the atmosphere is polluted by chlorine of fluorine compounds may be subject to high corrosion.

For example: hairdressing salons, industrial premises (solvents), cooling equipment, etc.

Boilers installed in such locations will not be covered by the guarantee.

8 ASSEMBLY

Tools required:

1	8-mm spanner	1	Phillips head screwdriver
1	10-mm spanner	1	* Simplified JD assembly tool (8 to 14 sections)
1	13-mm spanner	or 1	* JD-TE assembly tool for any model
1	19-mm spanner	or 1	* JD-TE Plus assembly tool for any model

* Not supplied with the boiler

Packaging: the tables below provide the numbers of the packages making up the boiler.
The packages are listed in the order in which they are to be opened during assembly

Type of Boiler		ES140/H	ES160/H	ES180/H	ES200/H	ES220/H	ES260/H	ES300/H	ES340/H	ES380/H
BOILER WITH UNASSEMBLED BODY										
	- Gas train package + piping + base frame + combustion chamber	GD 209	GD 210	GD 211	GD 212	GD 213	GD 214	GD 215	GD 216	GD 217
Boiler body:	Left-hand side sect. 8358-0003	1	1	1	1	1	1	1	1	1
	Intermediate sect. 8358-0001	6	7	8	9	10	12	14	16	18
	Right hand side sect. 8358-0002	1	1	1	1	1	1	1	1	1
	Set of two tie rods	8350-7121	8350-7122	8350-7123	8350-7124	8350-7125	8350-7126	8350-7127	8350-7128	8358-7074
	Package of unassembled body accessories	GD 12	GD 13	GD 14	GD 15	GD 16	GD 17	GD 18	GD 19	GD 20
	Draught diverter package	GD 32	GD 33	GD 34	GD 35	GD 36	GD 37	GD 38	GD 39	GD 40
	Casing & insulation package	GD 42	GD 43	GD 44	GD 45	GD 46	GD 47	GD 48	GD 49	GD 50
	Control panel	GD 51	GD 51	GD 51	GD 51	GD 51	GD 51	GD 51	GD 51	GD 51
BOILER WITH ASSEMBLED BODY										
	- Gas train package + piping + base frame + combustion chamber	GD 209	GD 210	GD 211	GD 212	GD 213	GD 214	GD 215	GD 216	GD 217
	Assembled boiler body package	GD 2	GD 3	GD 4	GD 5	GD 6	GD 7	GD 8	GD 9	GD 10
	Draught diverter package	GD 32	GD 33	GD 34	GD 35	GD 36	GD 37	GD 38	GD 39	GD 40
	Casing & insulation package	GD 42	GD 43	GD 44	GD 45	GD 46	GD 47	GD 48	GD 49	GD 50
	Control panel	GD 51	GD 51	GD 51	GD 51	GD 51	GD 51	GD 51	GD 51	GD 51

CON5258

9 GAS TRAIN UNPACKING

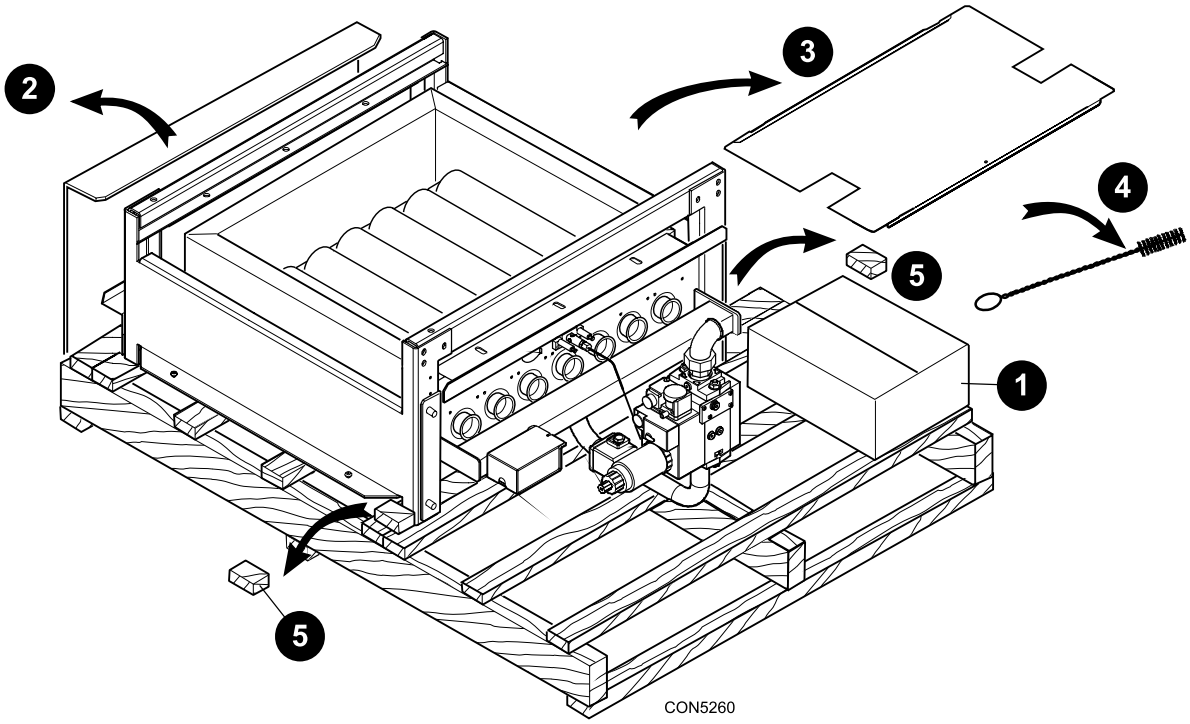

- Remove the cover and the 4 sides of the gas train package.
- take out the accessories box (1) and the flow and return pipes, the front support (2) and the lower panel (3).
- Put the brush (4) away.
- Remove the 2 blocks (5) on the front side.

10 COMBUSTION CHAMBER REMOVAL

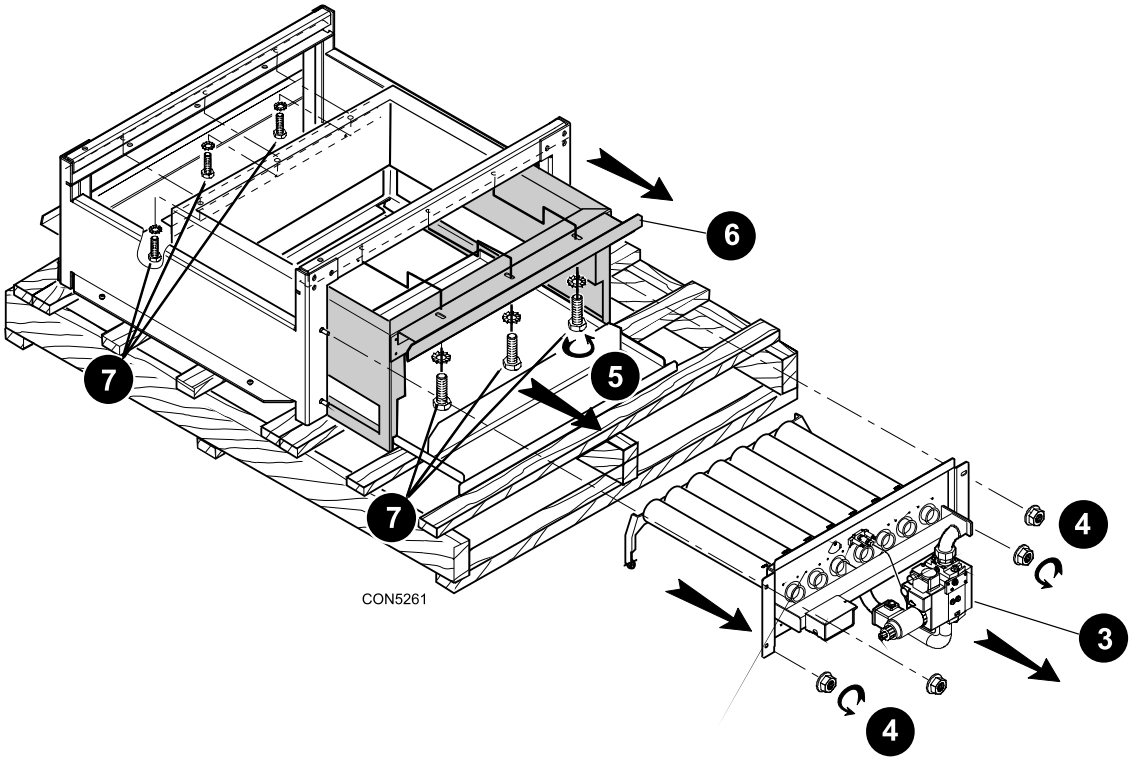

Before mounting the sections on the base frame:

- remove the burner drawer (3) unscrewing the 4 M8 hex. flanged nuts (4) on either side of the burner,
- remove the tray (5) located under the burner drawer,
- remove the combustion chamber (6) fastened by the M8 x 16 screws (7) and serrated washers located in the front and rear of the combustion chamber.

11 BASE FRAME

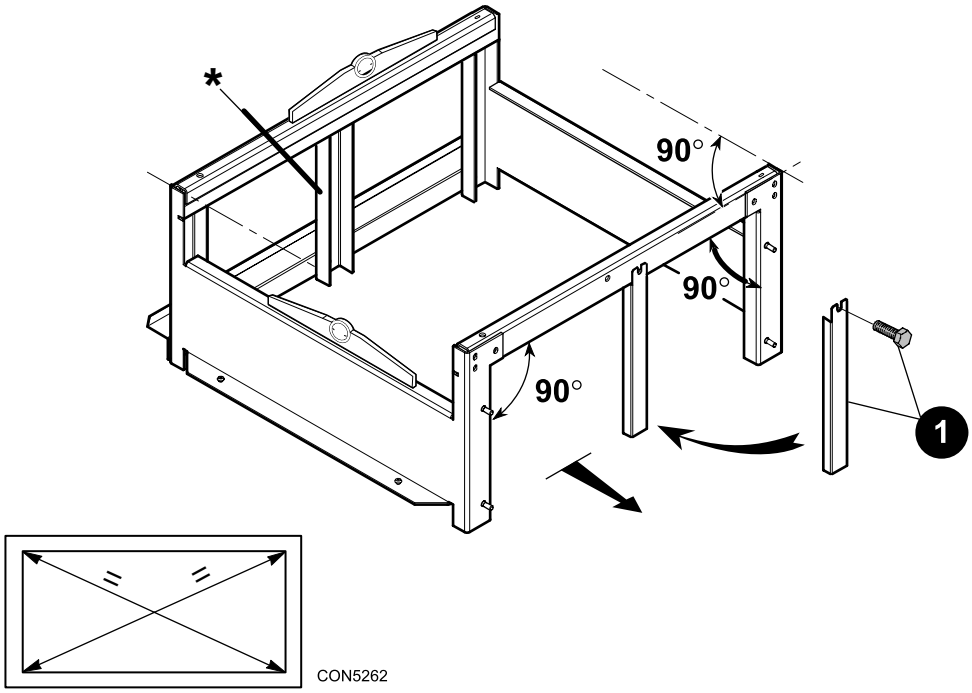

- Make the base frame level in both directions and ensure a right angle.
- **14 to 20 sections boilers**: mount the central foot (1) on the front of the base frame (this is only used to assemble the sections).

* The rear central foot is pre-assembled (14 to 20 sections models).

12 ASSEMBLING THE HEATING BODY

Note: Assembled Boiler Bodies

In the case of an assembled body, place the body on the base frame and fasten it with the 2 squares (2), then go to Frame 19.

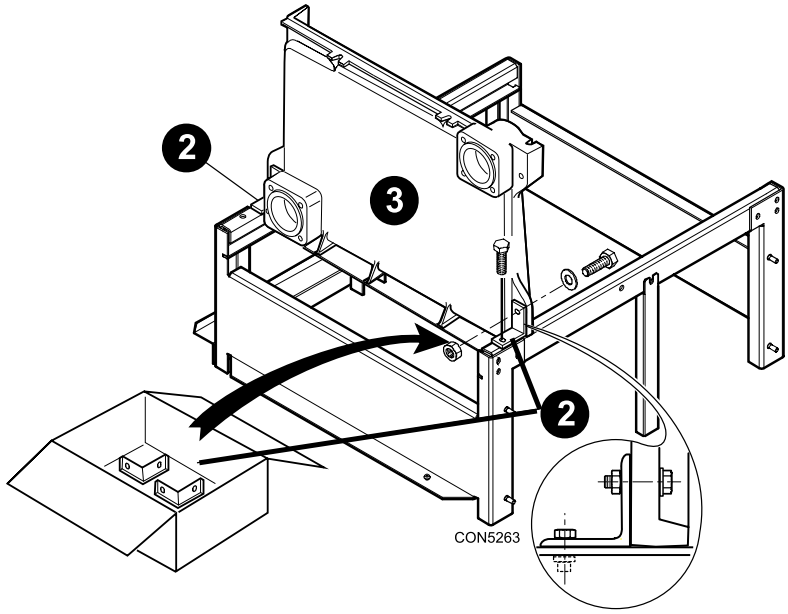

- Fix the 2 positioning brackets (2), supplied in the accessories package, onto the base frame (on the left or right-hand side**) using 2 H M6x25 screws.

  ** The side is to be determined according to the space available in the boiler room (see Frame 7) and the mounting direction chosen.

- Put the first section (3) in place and fasten it to the brackets (2) with 2 H8 x 30 screws + H8 nuts + M8N washers (washers on the cast iron side).
- Coat the edges of the side section or the sealing grooves with iron putty.
- Fit the nipples in the connections after having cleaned and coated them with a lubricant.

13 NIPPLE ASSEMBLY

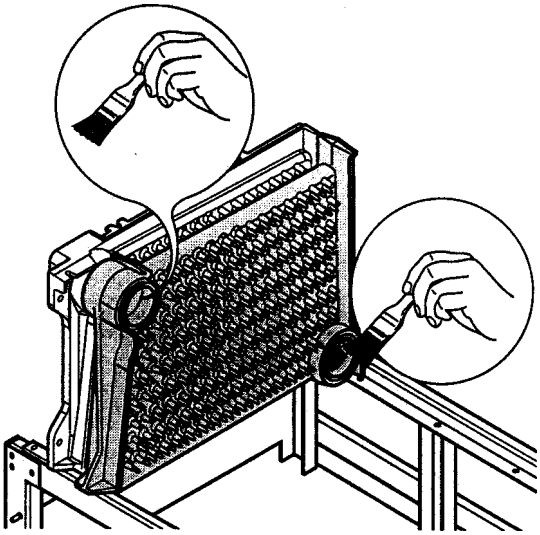

- Put the 2nd section in place and clean the bores with a brush.

14 NIPPLE ASSEMBLY AND SEALANT

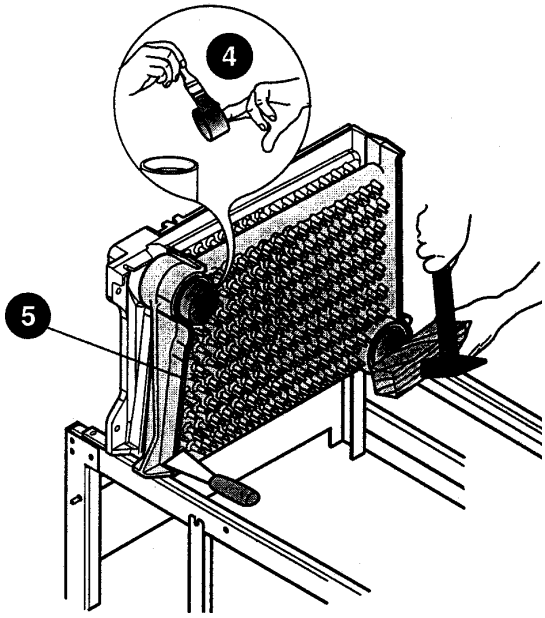

- Clean the nipples (4) and coat them with the lubricant supplied with the sections.
- Press in the 2 nipples moderately using a hammer and a piece of wood.
- Carefully apply filler on the sealing grooves (5) with a spatula so as to ensure correct tightness of the boiler body.
- Assemble 2 other sections using the same principle.

15 SECTION ASSEMBLY

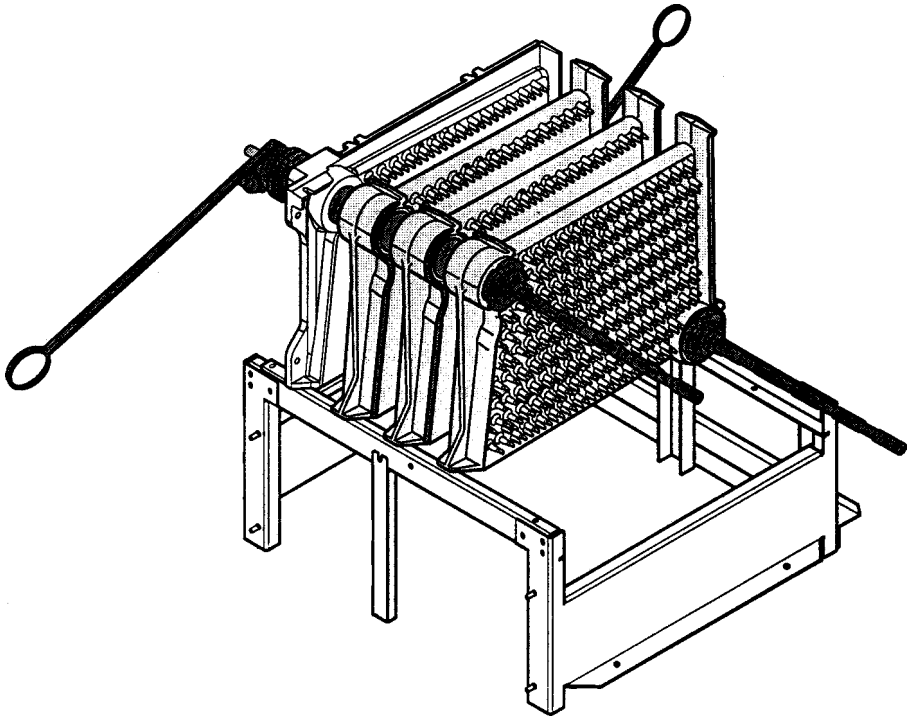

- Put the assembly tool in place (not supplied with the boiler).
- Tighten gradually so as to bring about simultaneous and identical closing of both upper and lower connections.
- Assemble the remaining sections as per the instructions under Frames 13 and 15.

NEVER ASSEMBLY MORE THAN 4 SECTIONS AT A TIME.

16 ASSEMBLY RODS

- Fit the tie rods with M10N washers and H10 nuts.
- Remove the assembly tool.
- Remove the central front foot.

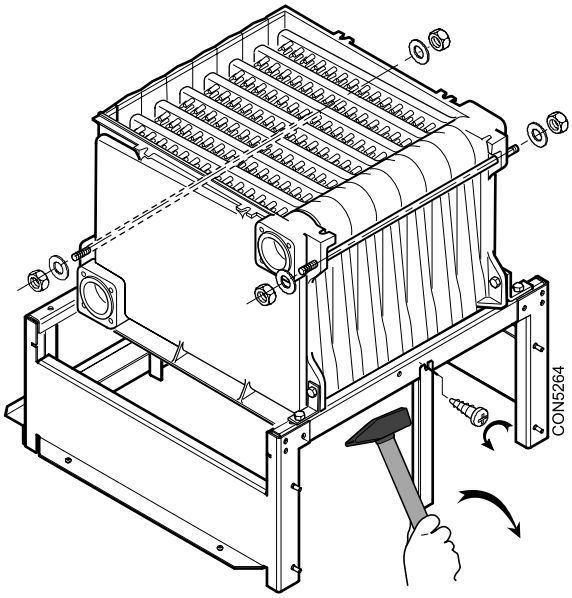

17 BURNER DRAWER ASSEMBLY

- Put the combustion chamber (1) back in place as indicated on the picture and fasten it onto the base frame (2) on the front and on the back (start on the back) using the H M8 x 16 screws + serrated washers removed during step 2.
- Slide the tray (3) in the combustion chamber taking care to have it resting on the lower edge of the combustion chamber walls.
- Put the burner drawer (4) back in place and fasten it onto the combustion chamber using the 4 H M8 flanged nuts.

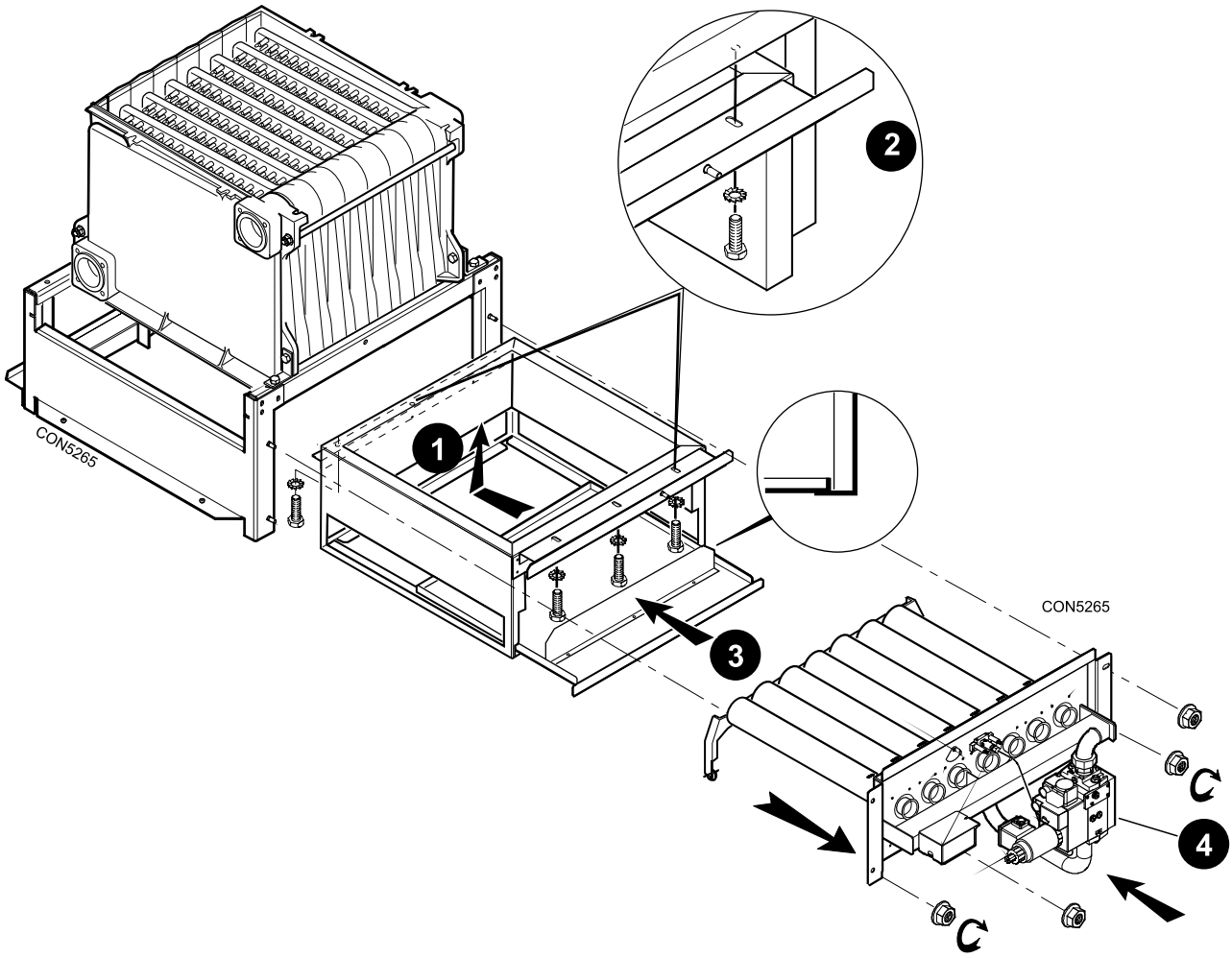

18 SYSTEM CONNECTIONS

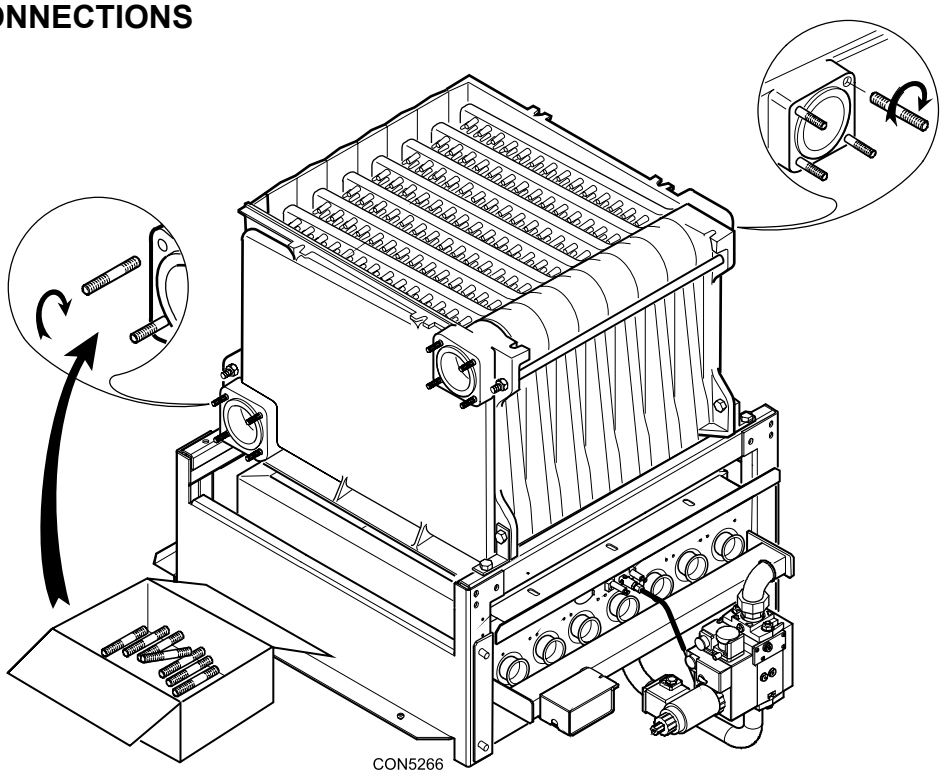

- Fasten the 16 M12 studs supplied in the accessories package onto the side sections connections, taking care to screw the short thread of the studs in the cast iron.

19 ASSEMBLING THE PIPING

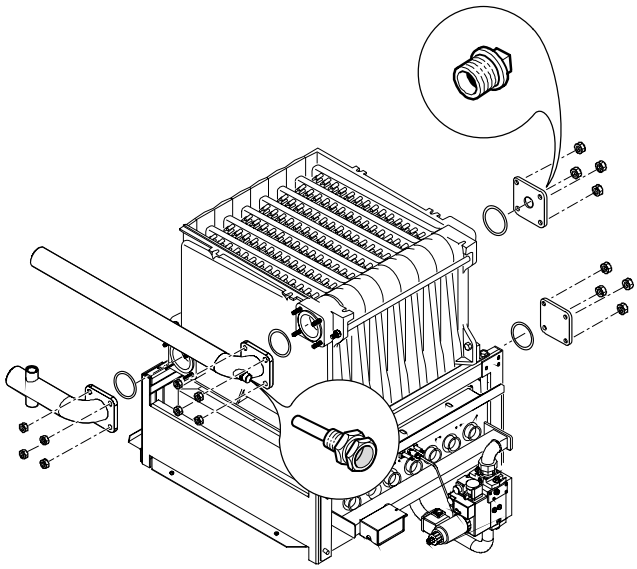

Flow and return pipes mounted on the left-hand side of the boiler

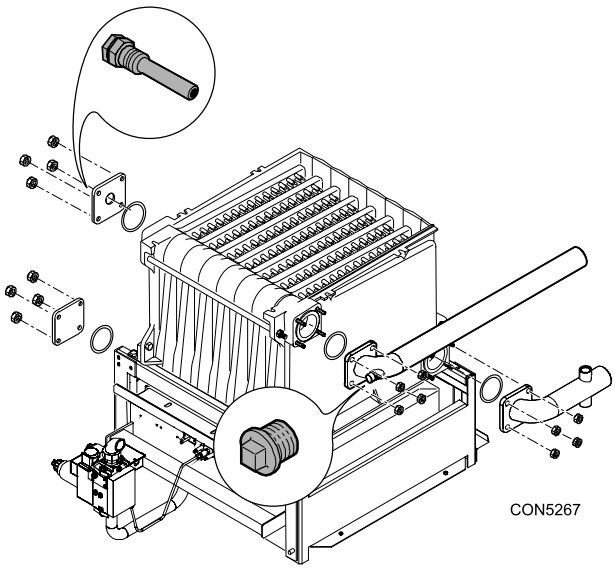

Flow and return pipes mounted on the right-hand side of the boiler

- Fasten the flow pipe, the return pipe, the threaded flange and the plain flange (4 H12 nuts and 1 seal for each pipe or flange).

  All hydraulic connections must be carried out on the same side (either on the right-hand side or on the left-hand side), but never diagonally.

- **The pocket must in all cases be placed on the left-hand side of the boiler.**
  - If the flow and the return are on the left-hand side: put the pocket in the flow pipe opening and the 1/2" plug in the threaded flange.
  - If the flow and return are on the right-hand side: put the pocket in the threaded flange and the 1/2" plug in the flow pipe opening.

20 ASSEMBLING THE DRAUGHT DIVERTER

- Stick the self-adhesive cord (1) on the top of the body.

  Start on the centre of the back side.

- Apply a silicone bead (2) as shown on the picture (only on the front side of the boiler).

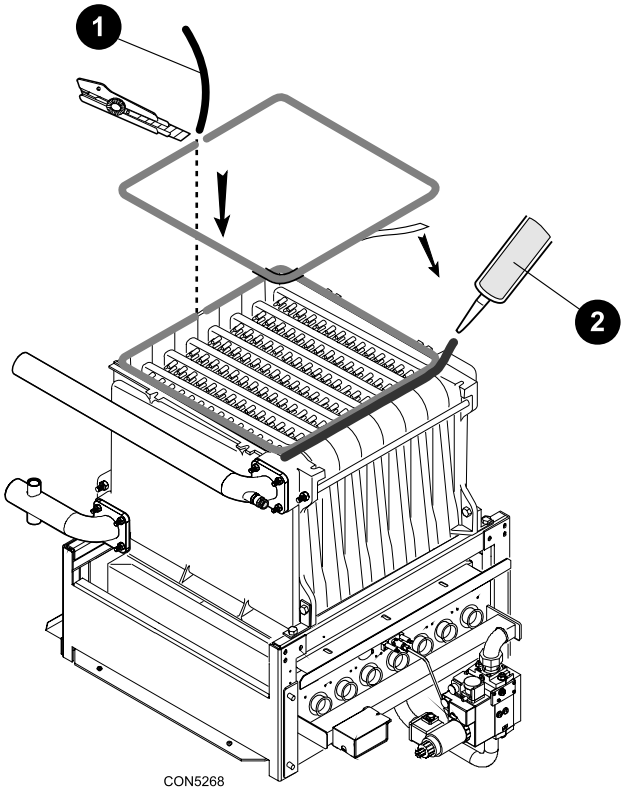

21 DRAUGHT DIVERTER

- Remove the nuts pre-mounted on the draught diverter and fit the draught diverter stiffener (3).

  The nuts will be finally tightened after Frame 33, after mounting and adjusting the side panels.

- Put the draught diverter (4) in place and fasten it onto the body using 4 H8 x 30 screws + 4 DE8 serrated washers + 4 nuts + 4 M8N washers.

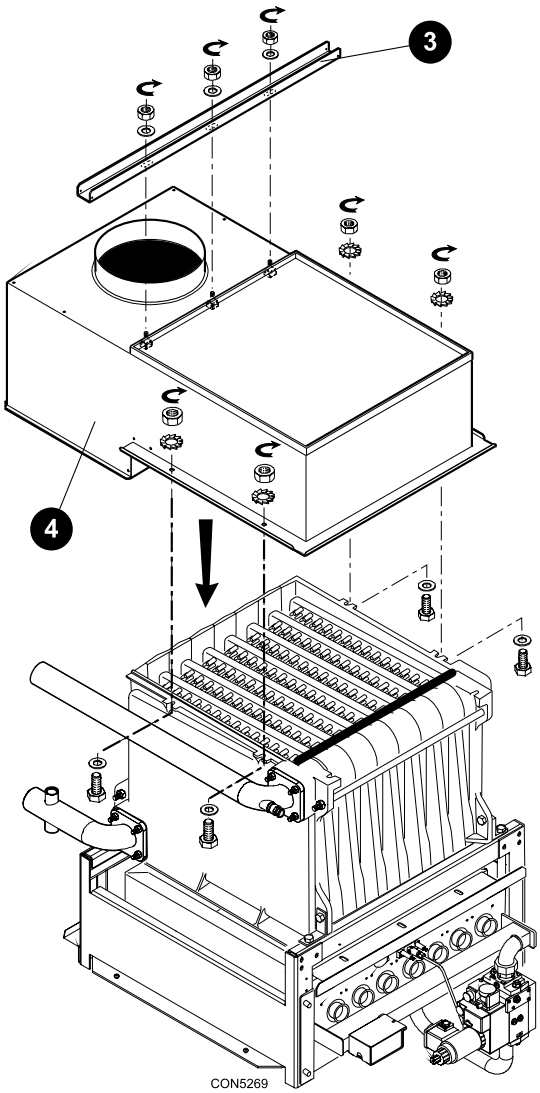

22 JACKET SUPPORTS

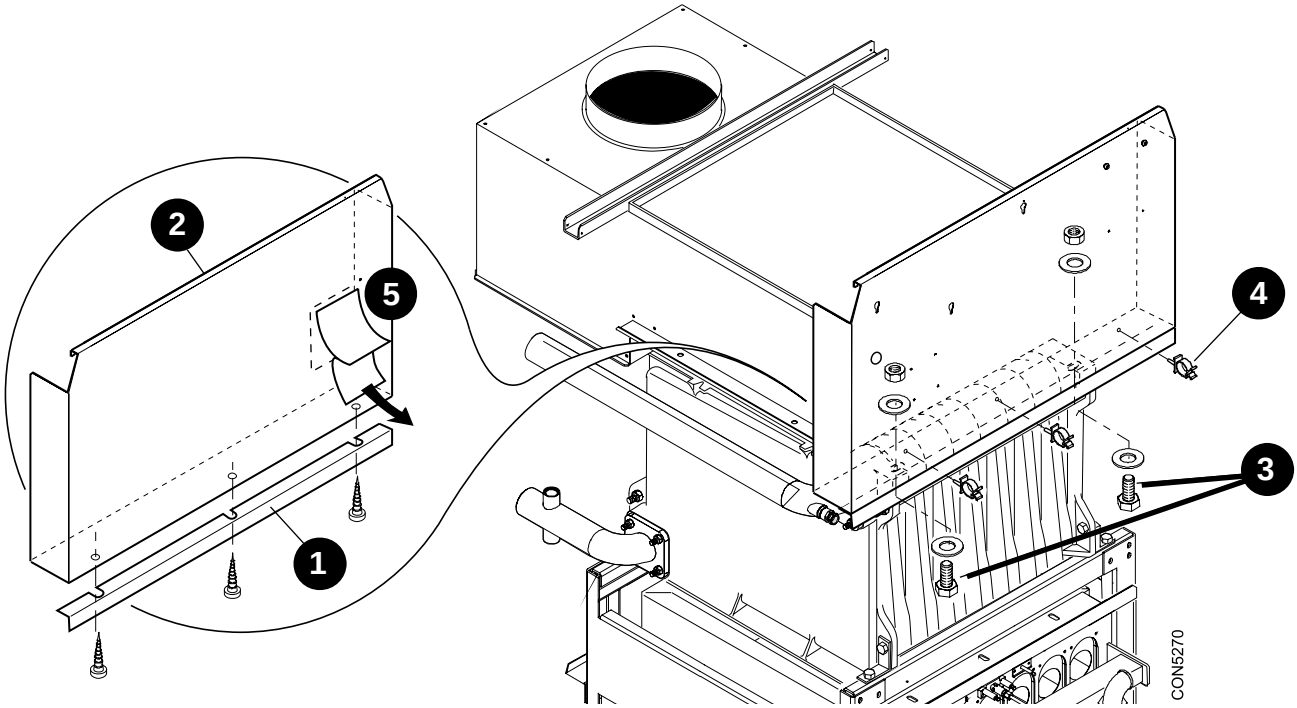

- Mount angle (1) (supplied in the casing package) on front support (2) and fasten it using the premounted self-tapping screws.
- Fasten the front support using 2 M8 x 25 screws + 2 nuts + 4 large-diameter washers.
- Put the 3 cable ties (4) in place on the control panel support.
- Stick the data plate (5) on the front support.

23 INSULATION ASSEMBLY

- Cut off the lower part of the rear insulation with a suitable tool (follow the cut-outs).
- Insert the rear insulation panel between the boiler body and the draught diverter. Insert the bottom of the panel into the retaining slot.

Note

Black insulation fabric on the outside.

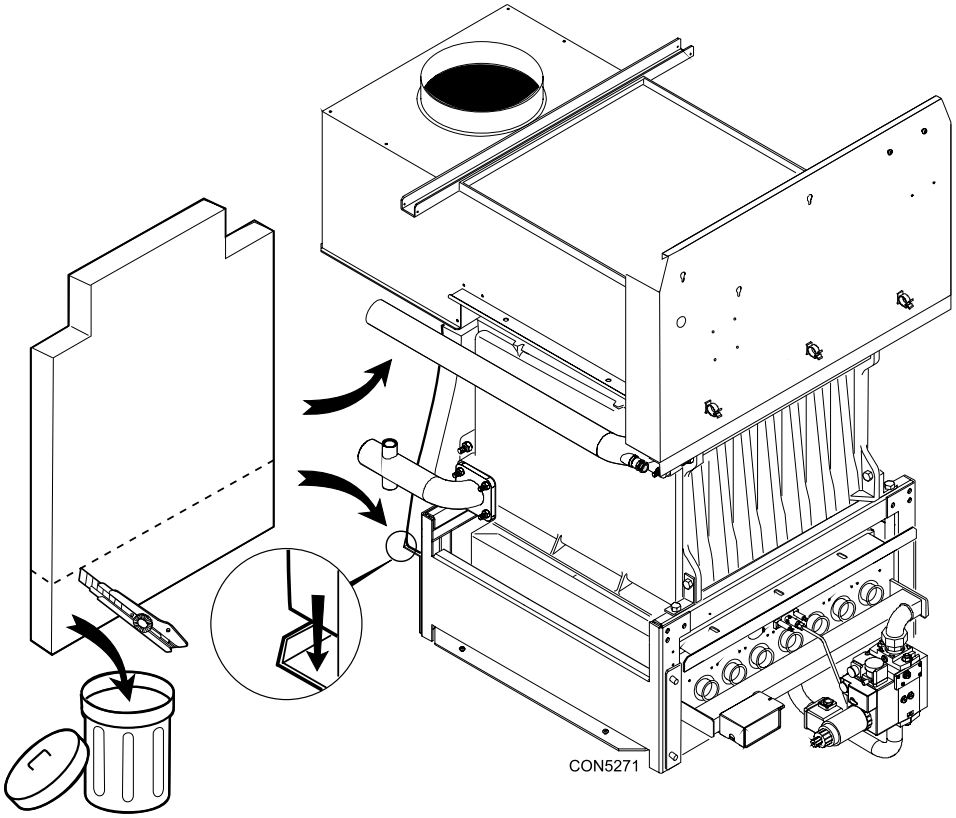

24 INSULATION

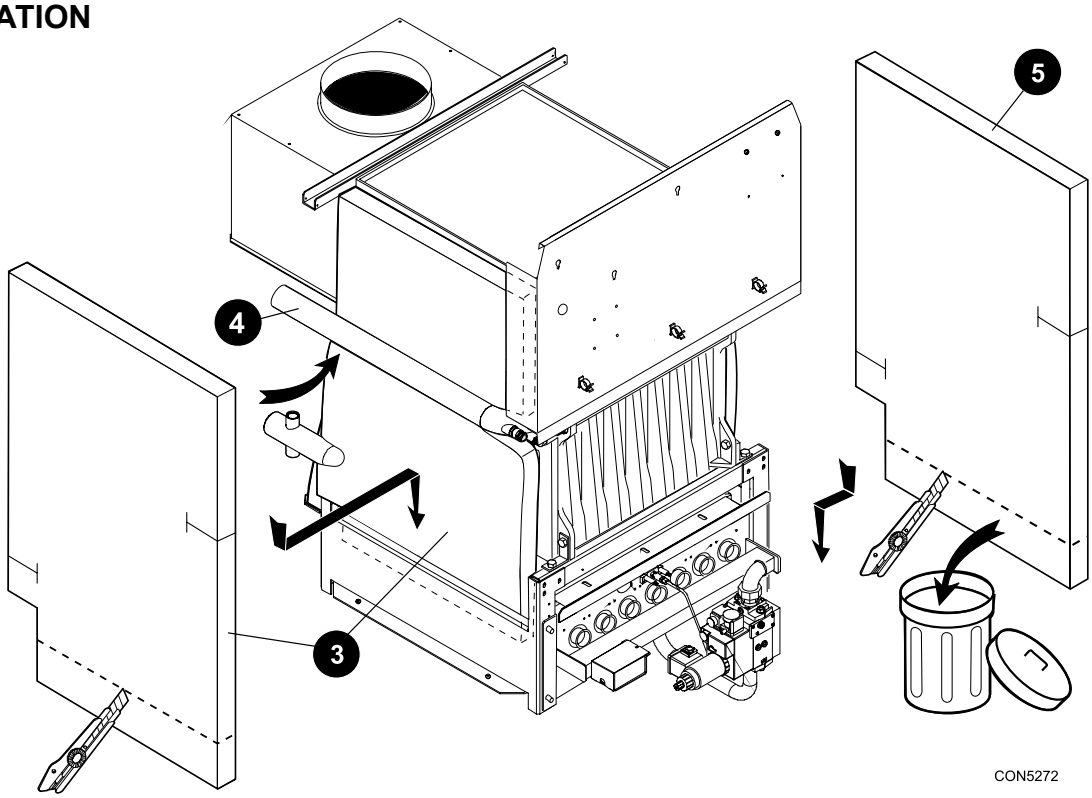

- Cut off the lower parts of the side insulations with a suitable tool (follow the cut-outs).
- Put the left-hand side insulation panel (3) in place:
  - insert the bottom into the base frame,
  - insert the top under flow pipe (4).
- Put the right-hand side insulation panel (5) in place inserting the bottom into the base frame.

25 INSULATION FASTENINGS

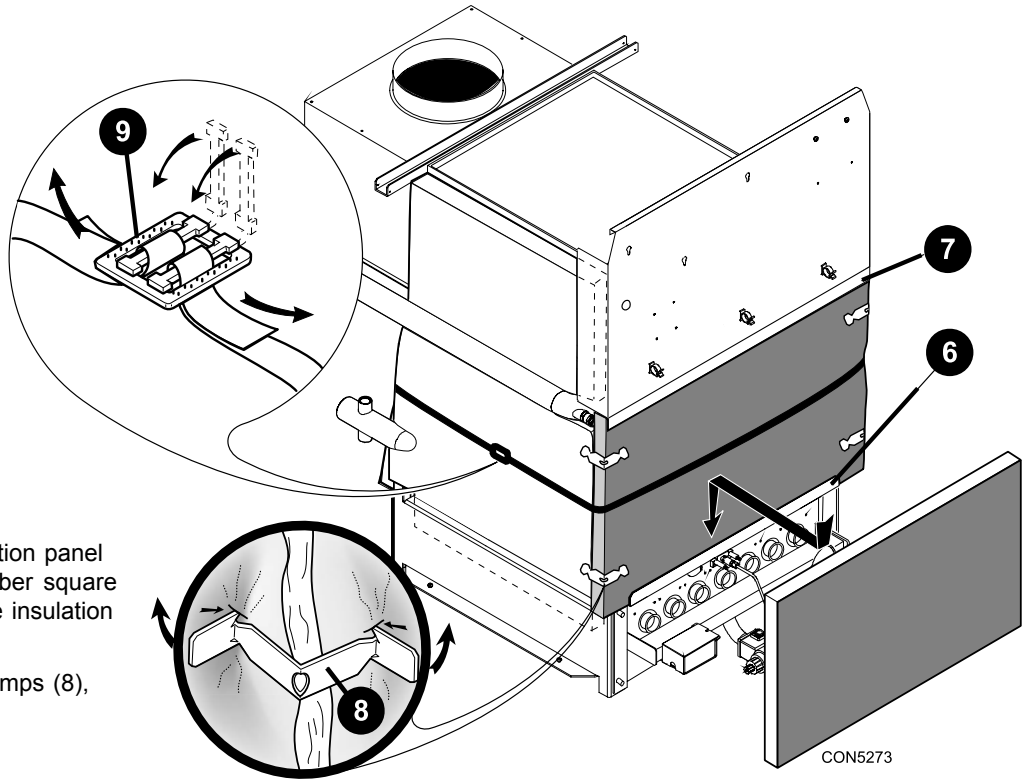

- Put the lower front insulation panel on the combustion chamber square (6) and insert it under the insulation holding square (7).
- Fasten the panel with clamps (8), then with strap (9).

26 UPPER FRONT INSULATION

- Put the upper front insulation panel in place inserting it between the draught diverter and the front support. Fasten it with clamps.

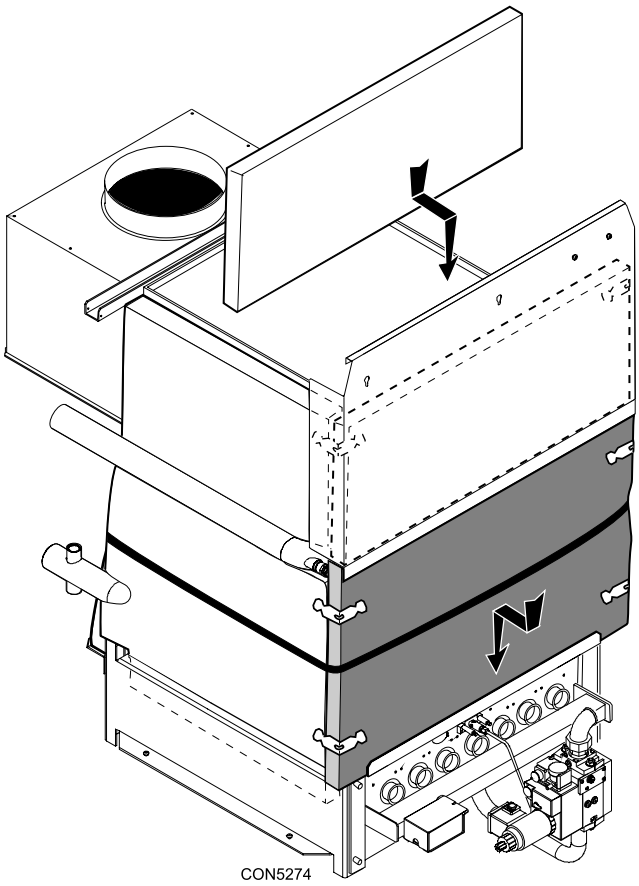

27 TOP INSULATION

- Put the top insulation panel on the draught diverter.

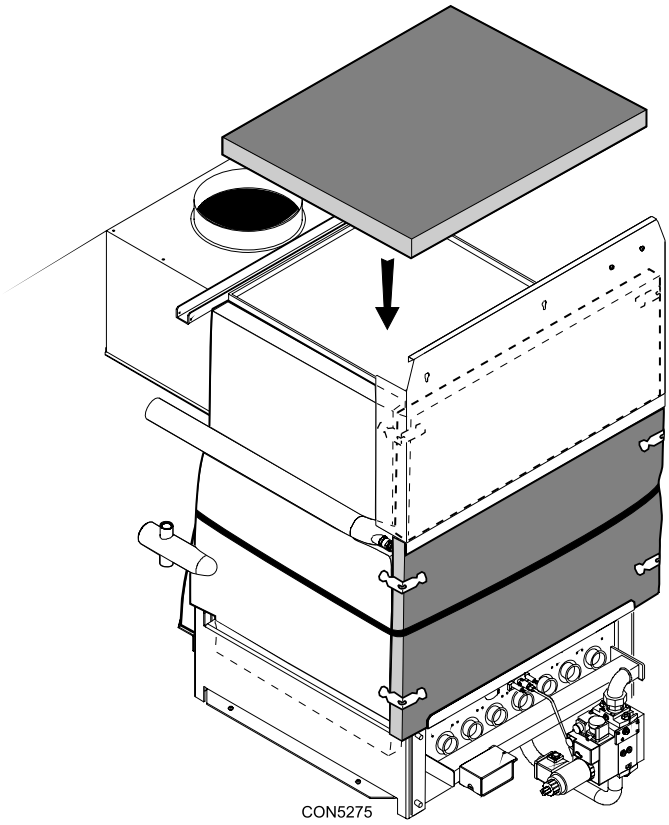

28 ASSEMBLING THE RIGHT-HAND SIDE PANEL

- Put the right-hand side panel (1) on the side angle bars of the base frame inserting the openings on the bushes (2), then lock pushing the panel backward.
- Fasten it on the support with 1 screw (3) + serrated washer and on the stiffener (4) with 1 self tapping screw (5).

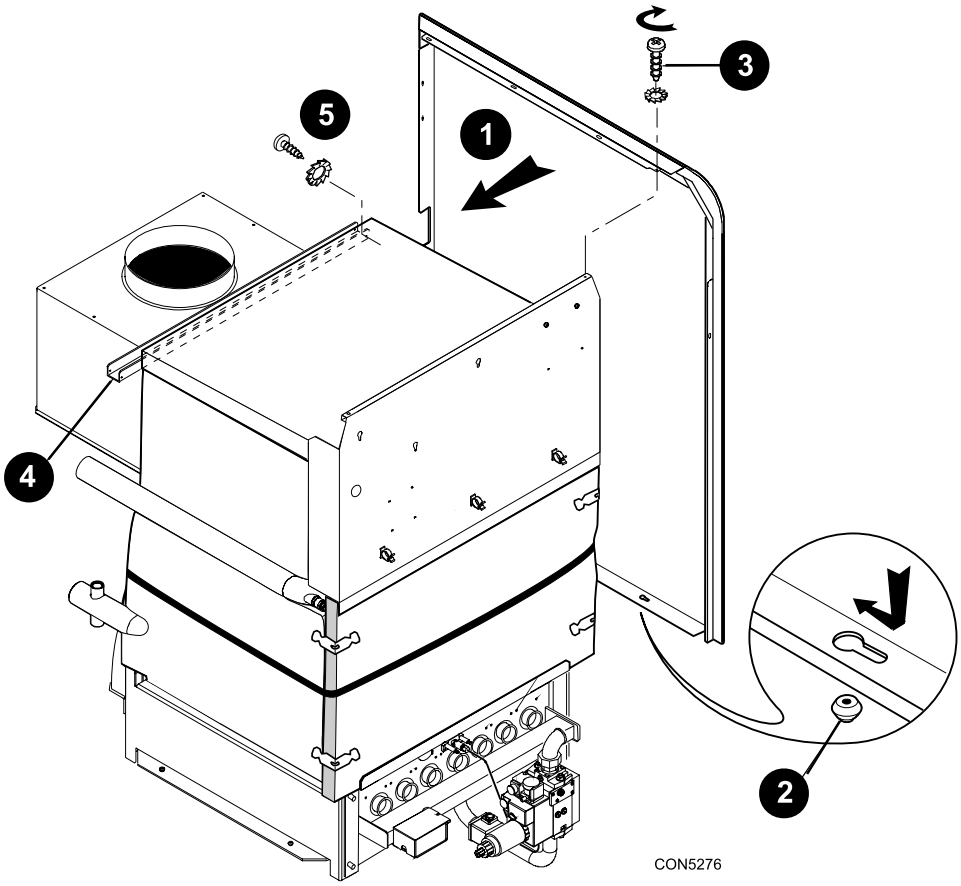

29 ASSEMBLING THE CONTROL PANEL (GD 51)

- Put the control panel (6) in place in the 3 openings on the front support.
- Fasten it on the front support with 2 screws (7) + serrated washers.

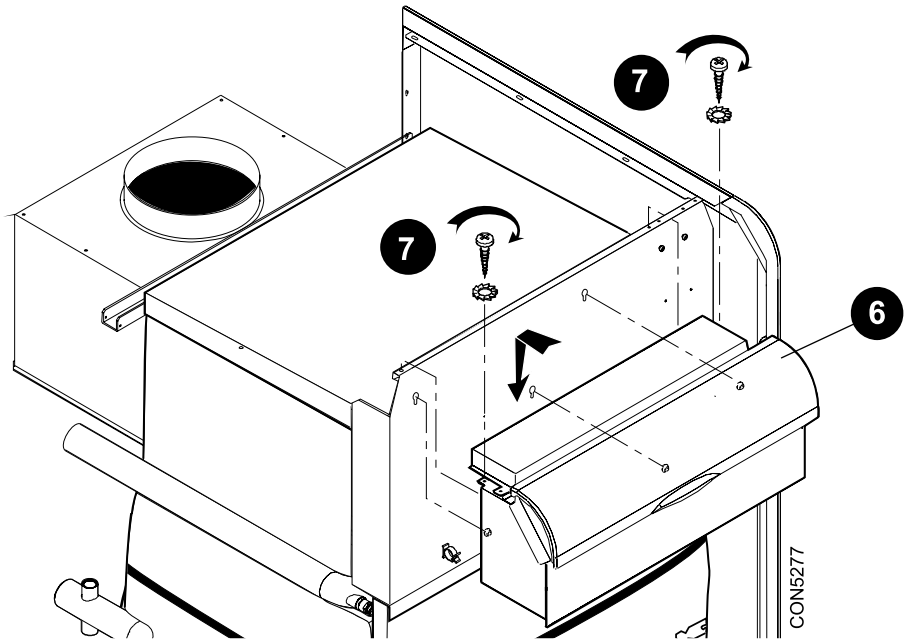

30 CONTROL PANEL BRACKETS

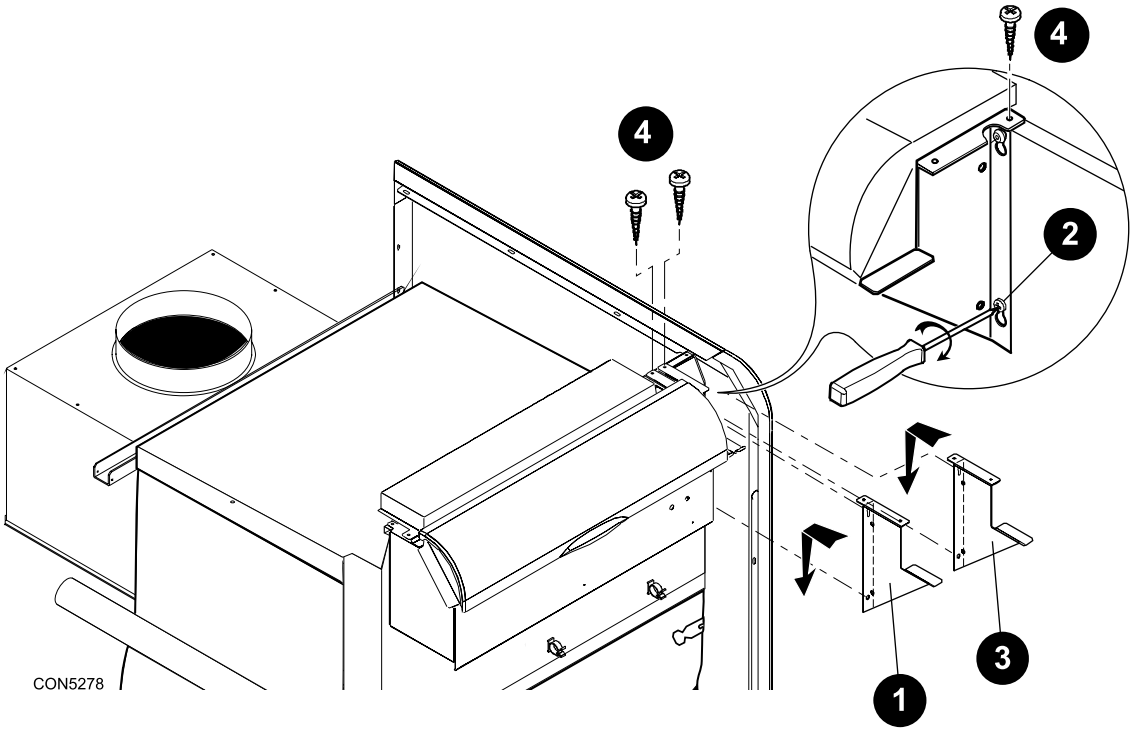

- Put the first bracket (1) in place in the first opening on the front support.
  Fix the bracket with screw (2).
- Put the second bracket (3) in place as shown above.
- Fasten the 2 brackets on the front panel support with 2 screws (4).

31 CONTROL PANEL WIRING

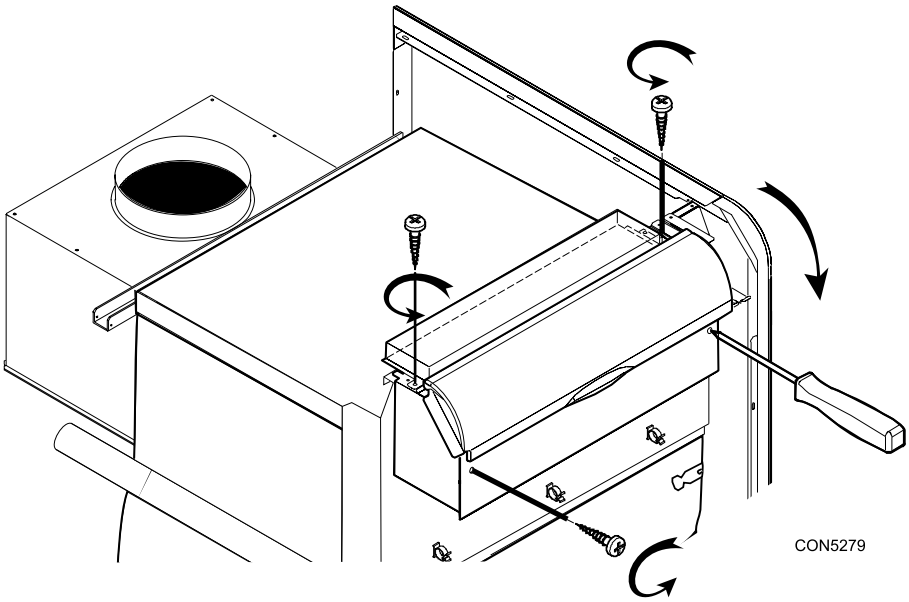

- Open the control panel unscrewing the 2 screws on the top and the 2 screws on the front.

32 FITTING THE PROBES

- Unreel the flexible ionisation probe cable (5) and push through opening (6) located in the lower part of the control panel.
- Push the capillaries (7) of the thermostats, the thermometer and the probe through opening (8).

Caution:

The non-insulated parts of the capillaries must be located outside of the panel.

- Combine the 4 capillaries and fit the probes in pocket (9), taking care to push them to the bottom.
- Electrical Connections:

  Complete the various electrical connections of the control panel (see technical instructions Frame 39).
- Put the retaining spring (10) in place.
- Close the control panel.

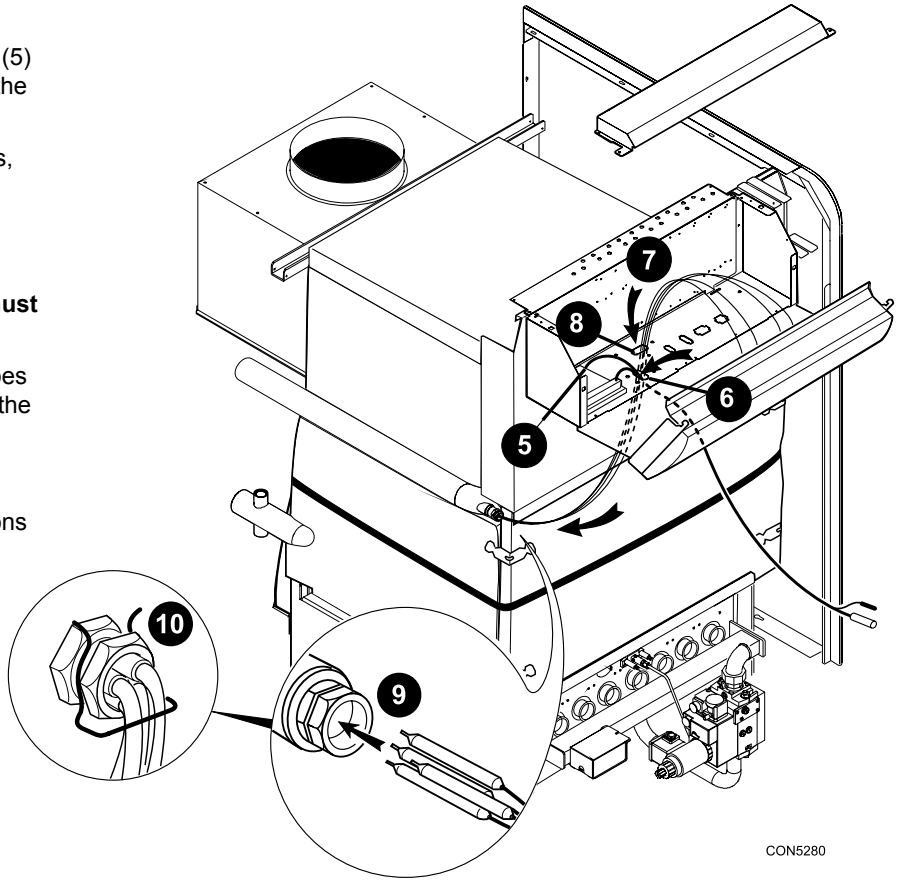

33 ASSEMBLING THE LEFT-HAND SIDE PANEL

- Put the left-hand side panel (1) on the side angle bars of the base frame inserting the openings on the bushes, then lock pushing the panel backward.
- Fasten it on the front support with 1 screw (2) + serrated washer, and on the stiffener (3) with a self tapping screw (4).
- After adjusting the side panels, tighten the screws fastening the stiffener (see Frame 21).

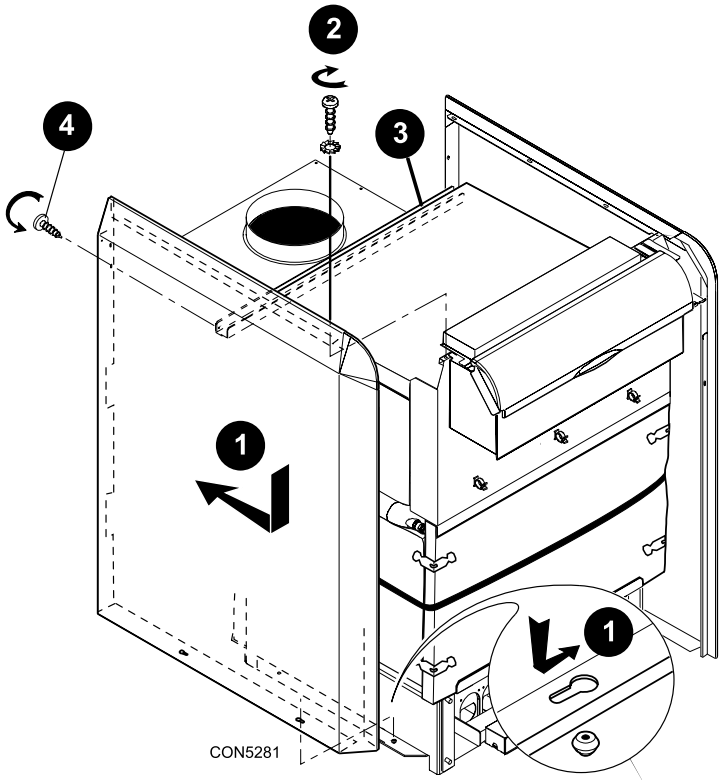

34 ELECTRICAL CONNECTIONS

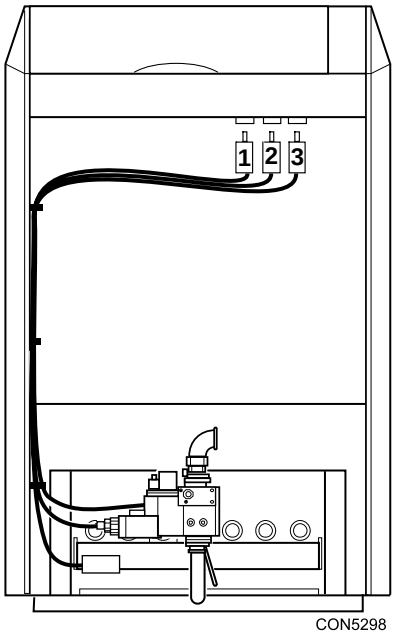

1. Ignition transformer
2. Gas pressure switch
3. Gas valves circuit

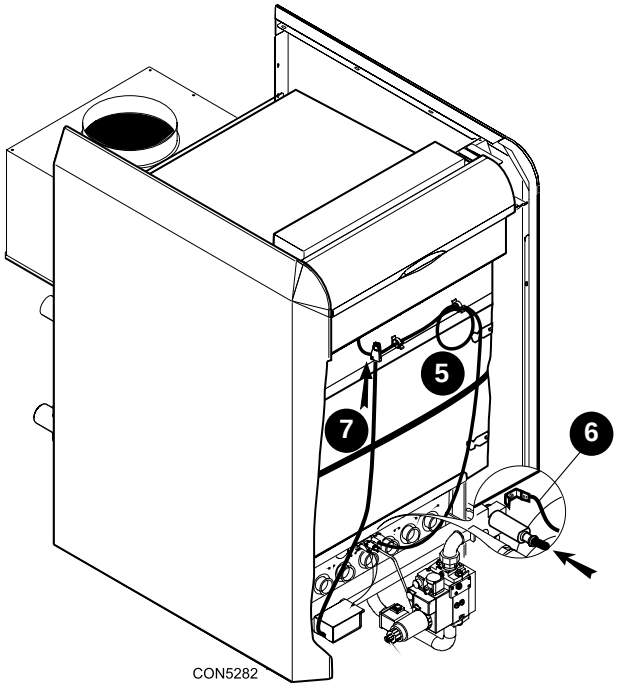

- Put the ionisation cable (5) in the cable ties.
- Connect the ionisation cable to the ionisation electrode (electrode on the right-hand side) as well as the earthing wire (6).

Note

Take care to separate as well as possible the ionisation cable from the electrical harness of the gas train.

- Plug the ignition circuit connector (7) (plug 1) into the left hand socket below the control panel.
- Plug gas pressure switch connector (plug 2)and gas valves (plug 3) into sockets as shown, below the control panel

35 INFILL PANEL

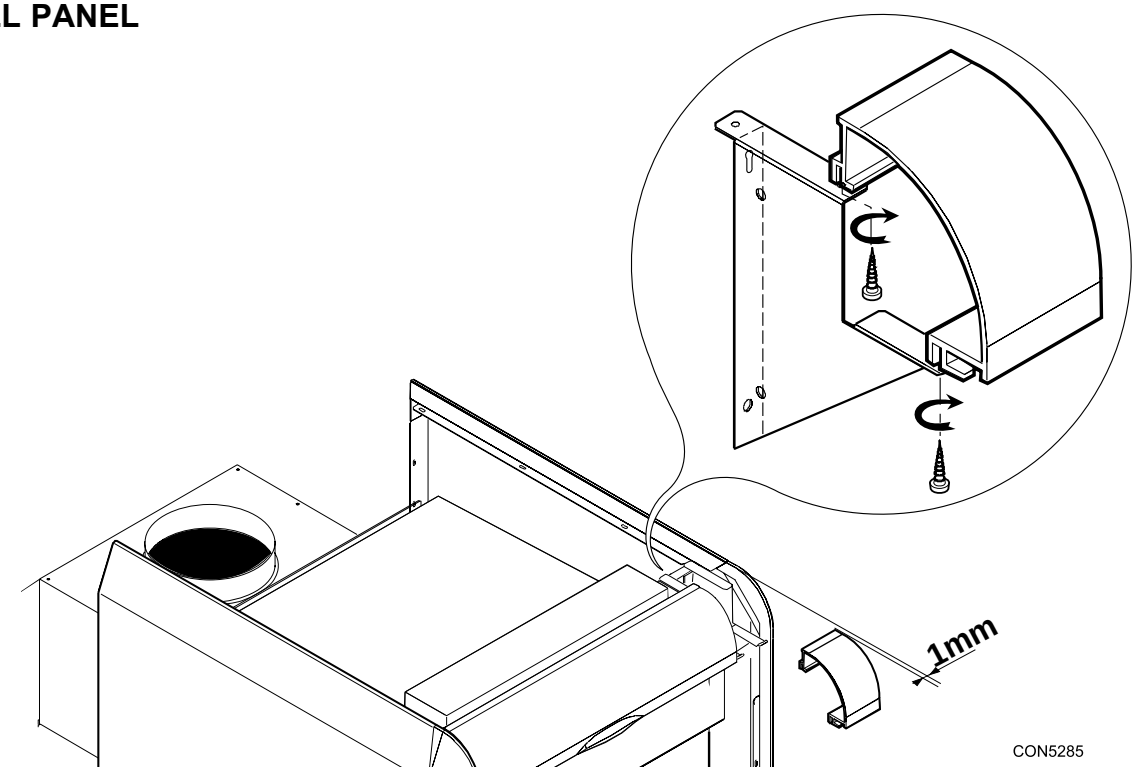

- Put the infill panel in place on the supports assembled during Frame 30, at 1mm from the right-hand side panel.
- Fix the infill panel from the bottom with 4 screws.

37 JACKET PANELS

- Put the upper front panel (1) in place and fasten it with 2 self tapping screws.
- Put the lower rear panel (2) in place inserting it into the return of the rear cross-bar (3), then fasten it with 8 self tapping screws.
- Put the upper rear panel (4) in place fitting it in the 2 notches (5), then fasten it with 4 self tapping screws.
- Assemble the rear deflector using 3 SIM screws.

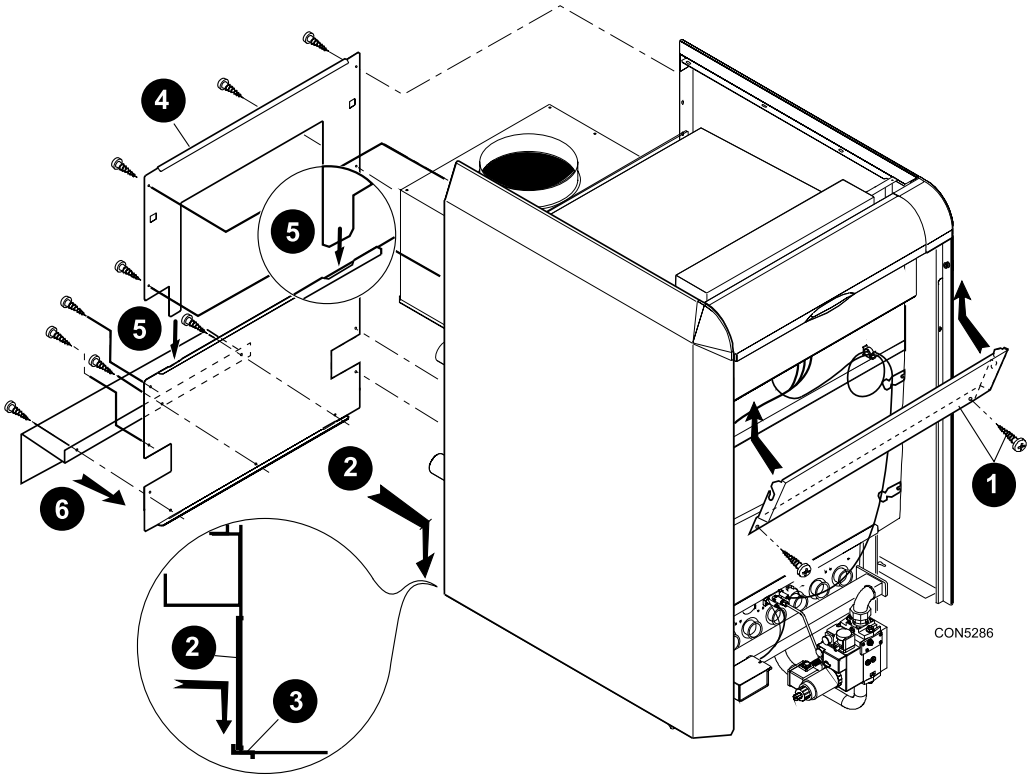

38 TOP AND FRONT PANELS

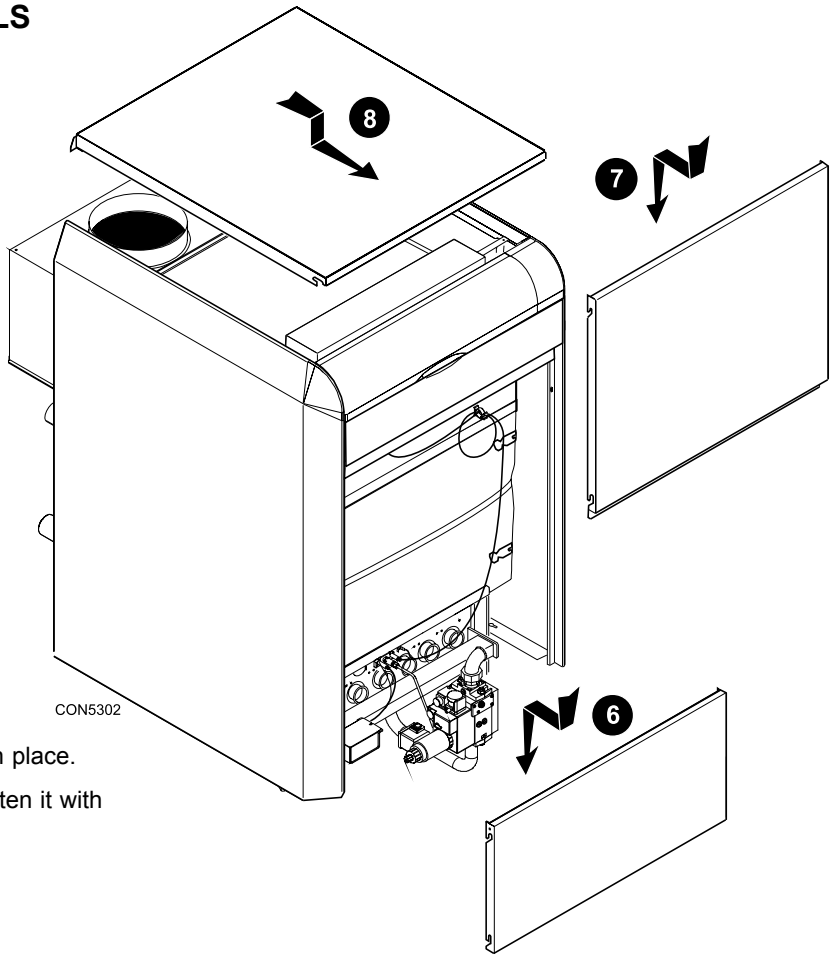

- Put the lower front panel (6) in place.
- Put the intermediate front panel (7) in place.
- Put the top panel (8) in place and fasten it with 2 self tapping screws.

39 ELECTRICAL CONNECTIONS

> ⚠ The electrical wiring has been thoroughly checked in the factory and the internal connections of the control panel must in no case be modified.

The electrical connections shall be made in compliance with the instructions given in the electrical diagrams supplied with the boiler and the guidelines provided in the manual. The electrical connection must comply with the standards in force.

Connection must be made in a way that allows complete isolation of the electrical supply - such as a double pole switch, having a 3mm (1/8") contact separation in both poles, or a plug and socket serving only the boiler and system controls. The means of isolation must be accessible to the user after installation.

All the connections shall be made to the terminal block provided for that purpose in the boiler control panel.

Proceed as follows to open the control panel (if required):

1. Remove the boiler top panel.
2. Unhook the intermediate front panel.
3. Remove the upper front panel.

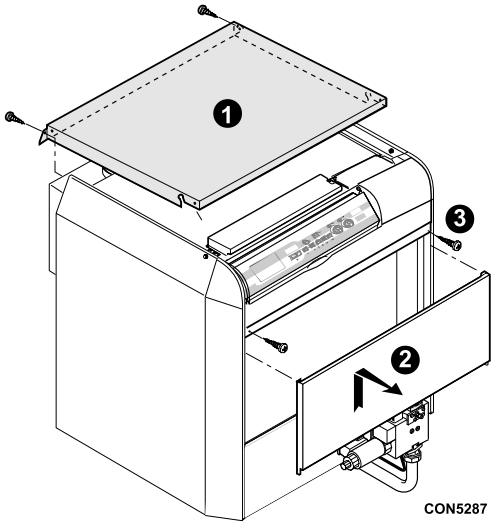

4. Remove the connection board cover.
5. After removing the 4 fastening screws, tilt the front cover to open the control panel.
6. Fasten the cables to the board supporting plate using cable clamps (6 cable clamps supplied in a bag) that are to be assembled as shown opposite.

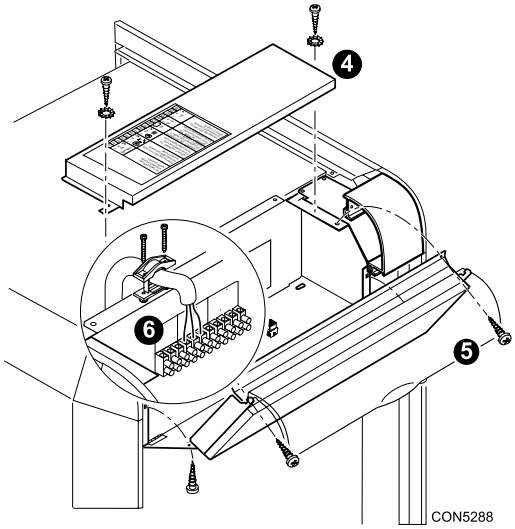

Make the connections as shown opposite.

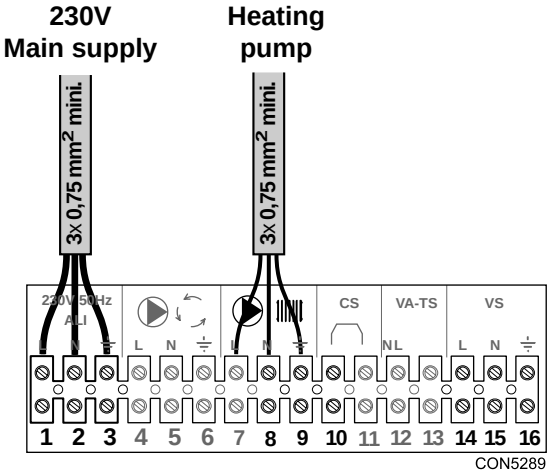

Note

If switched mains supply is used, then the pump overrun must be provided by an external timer to the boiler.

40 CONTROL PANEL DESCRIPTION

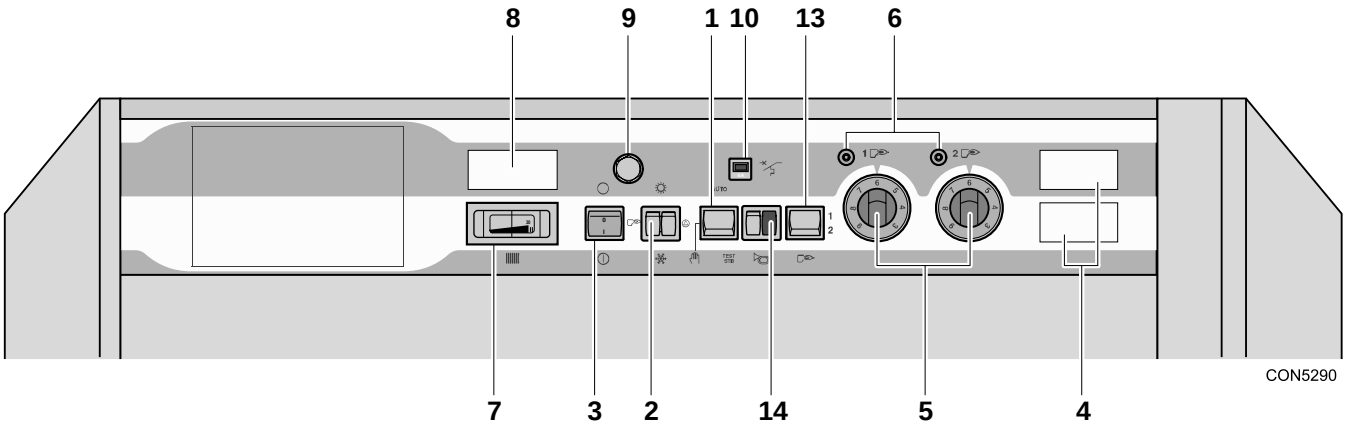

CONTROL PANEL DESCRIPTION

1. 3-Position Switch

Auto / Manual / TEST STB

MANUAL : manual position. It is regulated by the boiler thermostats (item 5).

The switch may be left either manual or automatic **AUTO** position.

TEST STB: momentary action for testing the safety thermostat:
Press the TEST STB switch and place the pump cut-off switch (2) to the "Summer" position.

2. Double switch Burner / Heating pump:
This switch controls the burner and the heating pump.

In the "Winter" position, both heating and domestic hot water are operating.

In the "Summer" position, only domestic hot water is operating (if a domestic hot water tank is connected).

3. Main On / Off switch.

4. Locations for hour run meters
for the first and the second stages (optional package IC8)

5. Boiler thermostats (40º to 90ºC):
A factory-mounted stop limits the maximum temperature to 75ºC. This stop may be moved if necessary (see Frame 50).

6. Stage 1 or stage 2 operation indicators:
They only light up when the relevant thermostat require heating and the safety contact is closed.

7. Boiler thermometer

8. Location for flue gas thermometer
(Optional package ID 28)

9. Safety thermostat with manual reset
(cut-off temperature: 110ºC)

10. 4 A circuit-breaker
time-delay circuit-breaker with manual reset.

13. Switch selecting the number of stages of the burner.

14. Burner alarm indicator and reset switch.

41 CONNECTING THE SAFETY THERMOSTAT ALARM INDICATOR

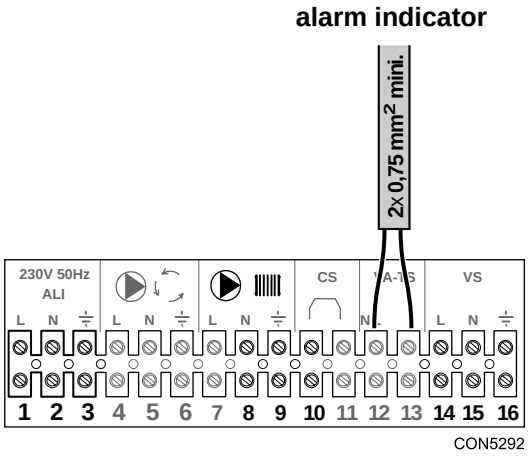

A remote alarm to indicate overheat may be wired as shown. This will be mains voltage.

42 CONNECTING THE OPTIONAL FLUE GAS THERMOMETER KIT (Package ID 28)

An optional flue gas thermometer may be fitted to the front of the control panel.

Proceed as follows:

- Cut the cover off with a knife along the edges of the coloured rectangle.
- Clip the thermometer into the opening.
- Bring the sensor to the back of the boiler via the cable channel and insert it in the flue gas pipe.

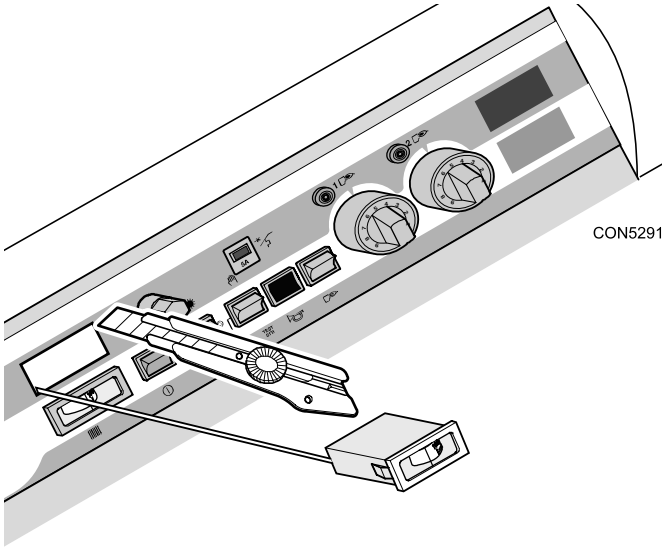

43 CONNECTING THE OPTIONAL HOUR RUN METER(S) KIT (Package IC 8)

One or two optional hour run meters (stages 1 and 2) may be fitted to the front of the control panel.

Proceed as follows:

- Cut the cover off with a knife along the edges of the coloured rectangle.
- Pull out the 2 wires prepared in the control panel.
- Connect the wires to the hour run meter (the wires are interchangeable).
- Clip the hour run meter into the control panel.

If the burner used is a two-stage burner, the counters display the operating time of each stage.

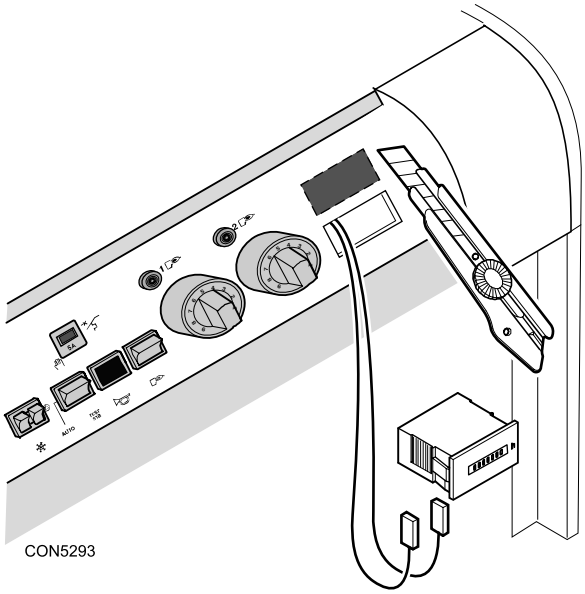

44 ELECTRICAL DIAGRAMS

SCHEMATIC DIAGRAM

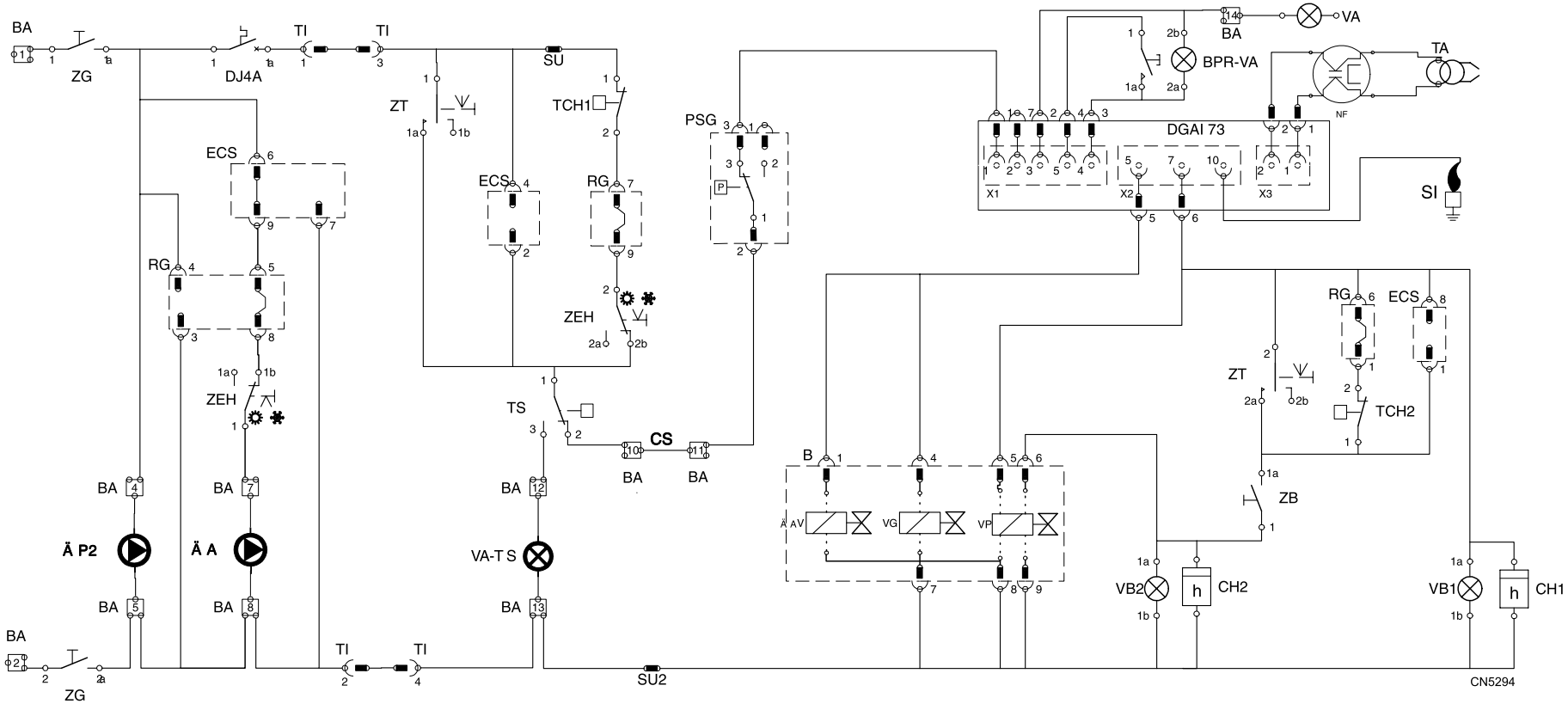

A	LOAD PUMP	**TA**	IGNITION TRANSFORMER
P2	SHUNT PUMP	**TCH1**	BOILER THERMOSTAT 1st STAGE
B	BURNER	**TCH2**	BOILER THERMOSTAT 2nd STAGE
BA	CONNECTING BOARD	**TI**	ISOLATING TRANSFORMER
BPR-VA	BURNER RESET BUTTON AND ALARM INDICATOR	**TS**	SAFETY THERMOSTAT
CH1	HOUR RUN METER 1st STAGE (OPTIONAL)	**VA**	ALARM INDICATOR
CH2	HOUR RUN METER 2nd STAGE (OPTIONAL)	**VA-TS**	SAFETY THERMOSTT ALARM INDICATOR
CS	SAFETY CONTACT	**VB1**	ON/OFF INDICATOR 1st STAGE
DJ4A	CIRCUIT BREAKER	**VB2**	ON/OFF INDICATOR 2nd STAGE
ECS	DOMESTIC HOT WATER	**VG**	GAS VALVE
FF	EEU SUPRESSOR	**VP**	MAIN GAS VALVE
PSG	GAS PRESSURE SWITCH	**ZB**	BURNER SWITCH
RG	REGULATOR	**ZB1**	SUMMER-WINTER SWITCH
SCS	SAFETY CONTROL BOX	**ZG**	MAIN SWITCH
S1	IONISATION PROBE	**ZI**	TEST SWITCH

INSTALLATION

45 GAS CONNECTIONS

Gas connections can be carried out either on the left-hand side or on the right-hand side of the boiler.

Gas connections shall be in compliance with applicable regulations and standards.

In all cases a shut-off valve shall be located as close to the boiler as possible.

46 FLUE CONNECTION

1. Complete the flue connection.
2. Details of flue outlet sizes are given in Table 2.
3. Seal with an approved boiler putty.

47 COMMISSIONING AND TESTING

GENERAL

Check that all drain cocks are closed, that any stop valves fitted to the flow and return pipes are open and that the system has been filled and properly vented.

PURGING

Check that the electricity supply is switched OFF.

Remove the casing lower front panel.

Extinguish all naked lights and open all doors and windows. DO NOT SMOKE. Check that the gas supply is turned ON at the meter and open the main gas inlet cock. Loosen the union and allow air to be purged from the gas line until gas is smelled. Refer to BS 6891 or IGE-UP-1 for further details. Retighten the union .

TESTING FOR GAS SOUNDNESS

Close the gas supply cock at the meter.

Connect a gas pressure gauge to the inlet test point. Take particular care to ensure a gas-tight connection. Open the gas supply cock at the meter and the appliance gas cock; record the static pressure. Next, close the gas supply cock at the meter. Wait for 1 minute for temperature stabilisation then observe the pressure gauge over a period of 2 minutes.

Any leaks must be cured.

Replace all pressure test point screws.

48 INITIAL LIGHTING

Before turning the boiler on, make sure that the installation is **filled with water**.

Carry out the start-up operations in the order indicated below: Refer to Frame 40 for identification.

- Open the main gas shut-off valve.
- Check the position of the 3-position switch **1**.
  - it may be either on the manual or on the automatic **AUTO** position.
- Set the Summer / Winter switch **2** to the "Winter" position.
- Switch on the electrical supply to the boiler.
- Set all the controls (thermostats **5**, external controls etc.) so that heat is required.
- The 1st stage thermostat always must be set to a value approximately 5ºC **higher** than the 2nd stage thermostat.
- Set the On / Off switch **3** to the "On" position.
- The boiler will light and thermostat indicator light (6) will illuminate. If it does not light the burner indicator (14) will be illuminated. Press in and release the reset switch (14). The controls will reset and attempt to light.
- Check all connections for gas soundness, using leak detection fluid.

49 MOVING THE THERMOSTAT STOP

The stop is factory-set to limit the maximum temperature to 75ºC. To move the stop, proceed as follows:

- Pull the thermostat button out.
- Remove the stop using pliers.
- Place the stop in the hole corresponding to the desired higher temperature (maximum 90ºC).

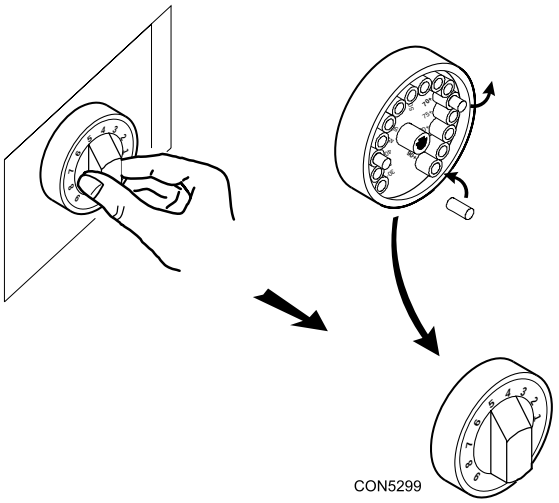

50 SETTING PROCEDURE (all boilers)

1. Adjusting the 2nd stage pressure:

- Connect the pressure gauge to the manifold pressure tapping.
- Operate the boiler at the 2nd stage acting upon the thermostat(s).
- Adjust the burner injector pressure indicated in Table 1 as follows:
  - unscrew the slotted head screw **C** by approximately one turn and unscrew completely the adjusting knob **D** (turning it counter-clockwise), then tighten again screw **C**.
  - adjust the injector pressure adjustment screw **B** of the regulator. Clockwise rotation increases the pressure, counter-clockwise rotation decreases it.

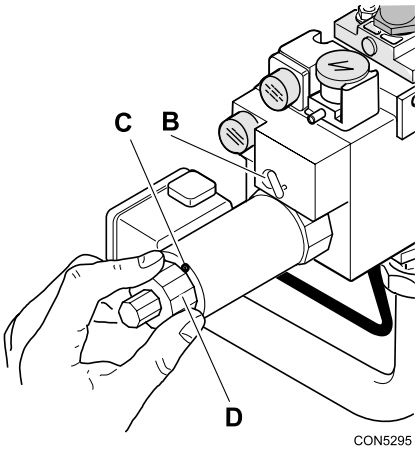

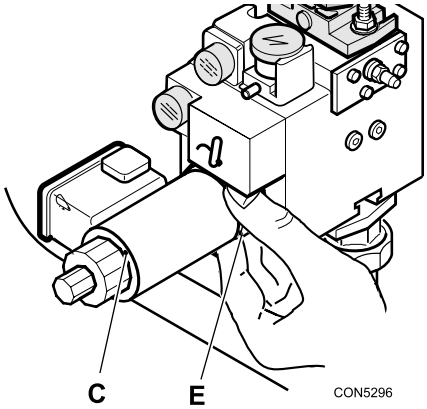

2. Adjusting the 1st stage pressure:

- Operate the boiler at the 1st stage acting upon the burner operation selecting switch located on the boiler control panel.
- Adjust the flow in order to obtain the injector pressure indicated in Table 1 (0.5 x the 2nd stage pressure) as follows:
- Adjust the 1st stage flow with the help of ring **E**. Clockwise rotation decreases the pressure. Counter-clockwise rotation increases the pressure
- Tighten locking screw **C**.

3. Adjusting the starting rate (or initial flow):

Start rate is factory-set to the minimum (9 mb starting pressure).

Depending on the installation conditions, one may adjust the start rate setting in order to ensure an optimal start of the boiler. The maximum permissible is 12 mb.

Proceed as follows:

- Unscrew protection cap **G**, turn it over and use it as a key to turn adjusting spindle **H** until obtaining the initial flow required.

  Counter-clockwise rotation increases the initial flow, clockwise rotation decreases it.
- After adjustment, put cap **G** back in place.

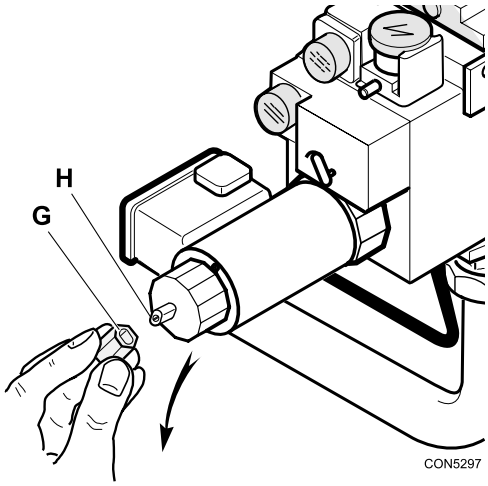

51 CHECKING GAS PRESSURE SWITCH

The minimum gas pressure switch fitted on the gas valve is factory set to 12.5 mbar. If the gas supply pressure drops, the minimum pressure switch turns the boiler off.

52 SPILLAGE CHECK

Check there is no spillage of combustion products from the boiler draught diverter by carrying out a spillage test, as detailed in BS. 5440:1.

53 SERVICING (to be performed by a CORGI registered installer)

The burner and the heat exchanger must be cleaned regularly in order to ensure their efficiency.

Cleaning is recommended at least once a year or more if necessary.

WARNING

Always turn OFF the gas supply at the gas cock and disconnect the electricity supply to the appliance BEFORE servicing or replacing any components.

54 CLEANING THE BURNER

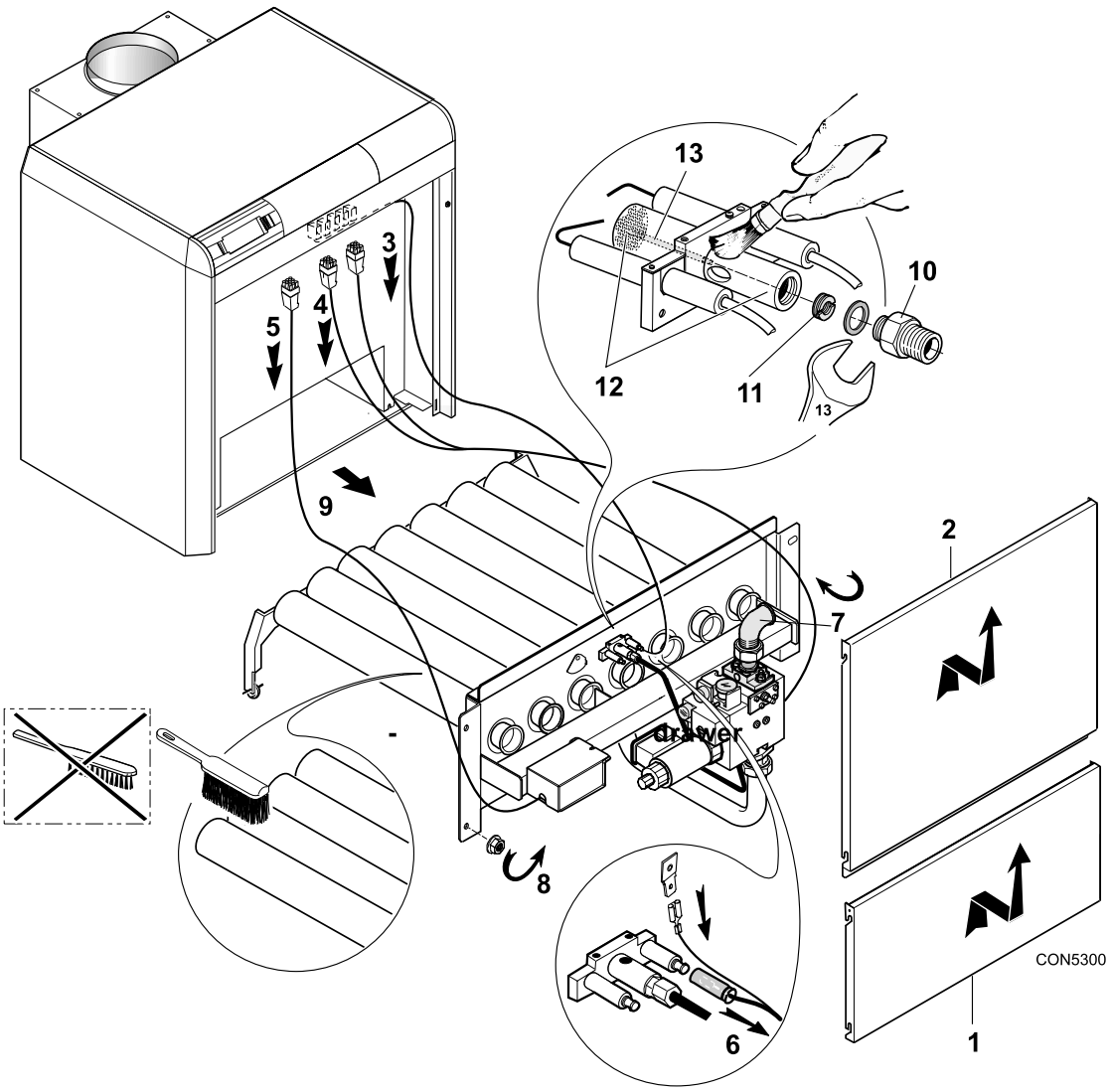

Removing the burner:

- Disconnect the power supply to the boiler.
- Isolate the gas supply.
- Remove the lower boiler panel **1**.
- Remove the intermediate boiler panel **2**.
- Disconnect gas valve connector **3** and gas pressure switch connector **4** located under the control panel.
- Disconnect ignition transformer circuit **5**.
- Disconnect ionisation cable **6** as well as the earthing wire on the ionisation probe side.
- Unscrew the pipe union **7** on the gas inlet pipe.
- Unscrew the 4 burner drawer fastening nuts **8**.
- Remove the burner drawer **9**.

Cleaning the main burner:

- Clean the burner rails (slots) using a soft brush or a vacuum cleaner.

Cleaning the ignition burner:

- Disconnect the ignition burner gas supply pipe **10** using a 13mm spanner.
- Clean injector **11**, ignition burner **12** and flame tube **13** located inside the ignition burner.

DO NOT USE A METAL BRUSH

55 CLEANING THE BOILER BODY

Check the condition of the boiler body at least once a year and clean it if dirty.

If the boiler needs to be swept, remove the burner (use Frame 54) from the combustion chamber in order to prevent deposits and soot falling on the burners.

Once the burner has been removed as directed in Frame 54.

- Remove the top panel.
- Remove the top insulation material.
- Open the cleanout cover of the draught diverter.
- If necessary, clean the boiler body.
- After having cleaned the boiler body, clean the combustion chamber plate with a hand-brush or vacuum cleaner.

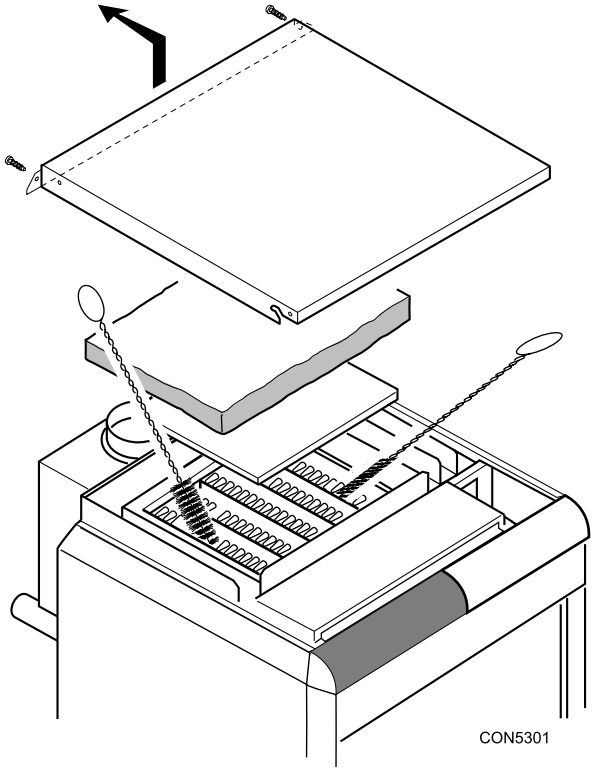

56 PAINTED SURFACES

Painted surfaces may be cleaned with cold or luke warm soapy water. Wipe them with a soft cloth or a wet sponge.

Technical Training

The Ideal Boilers Technical Training Centre offers a series of first class training courses for domestic, commercial and industrial heating installers, engineers and system specifiers. For details of courses please ring: 01482 498 432

Ideal Boilers, P.O. Box 103, National Ave, Kingston upon Hull, HU5 4JN. Telephone: 01482 492 251 Fax: 01482 448 858. Registration No. London 322 137.

Caradon Ideal Limited pursues a policy of continuing improvement in the design and performance of its products. The right is therefore reserved to vary specification without notice.

April 2002 UIN 157 602 A02

Caradon
Ideal Limited

Ideal Installer/Technical Helpline: 01482 498 376
www.idealboilers.com